LOT 21
RIVER PLACE @ SUMMER BEACH
PB 6/315

WATSON FAMILY TRUST/WATSON CHARLES E CO-TRUSTEE
95220 SPRING TIDE LN
FERNANDINA BEACH, FL 32034

2025

00-SB-30-185R-0021-0000

NASSAU COUNTY PROPERTY

BUILDING CHARACTERISTICS

ELEMENT	CD	CONSTRUCTION
Exterior Wall	17	CB STUCCO 100
Roof Structur	08	IRREGULAR 100
Roof Cover	07	CONC TILE 100
Interior Wall	05	DRYWALL 100
Interior Floo	11	CLAY TILE 70
Interior Floo	14	CARPET 30
Air Condition	03	CENTRAL 100
Heating Type	04	AIR DUCTED 100
Bedrooms		3 100
Bathrooms		4 100
Frame	02	WOOD FRAME 100
Stories	3.	3. 100
Units		0 100
Quality	03	Quality Level 03
DOR CODE	0100	SINGLE FAMILY
MAP NUM		MKT AREA 03
NEIGHBORHOOD/LOC	3023.00	

AREA TYPE	TOTAL GROSS AREA	PCT OF BASE	YEAR	TOT ADJ AREA	SUBAREA MARKET VALUE
BAS	620	100	2004	620	101,924
FGR	542	55	2004	298	48,990
FOP	21	30	2004	6	986
FOP	197	30	2004	59	9,699
FOP	266	30	2004	80	13,152
FSP	261	40	2004	104	17,097
FST	20	55	2004	11	1,808
FST	20	55	2004	11	1,808
FST	25	55	2004	14	2,301
FUS	1,407	100	2004	1,407	231,303
TOTALS	5,262			4,326	711,168

MARKET ADJUSTMENTS

TYPE	MDL	EFF. AREA	TOT ADJ PTS	EFF. BASE RATE	REPL. COST NEW	AYB	EYB	ECON	FNCT		NORM	% COND
0320	12	4,326	182.6616	182.66	790,187	2004	2004	0	0	0	10.00	90.00

1 TOWNHOUSE - 100% - 2025 Heated Area: 3702 HX Base Yr 2025

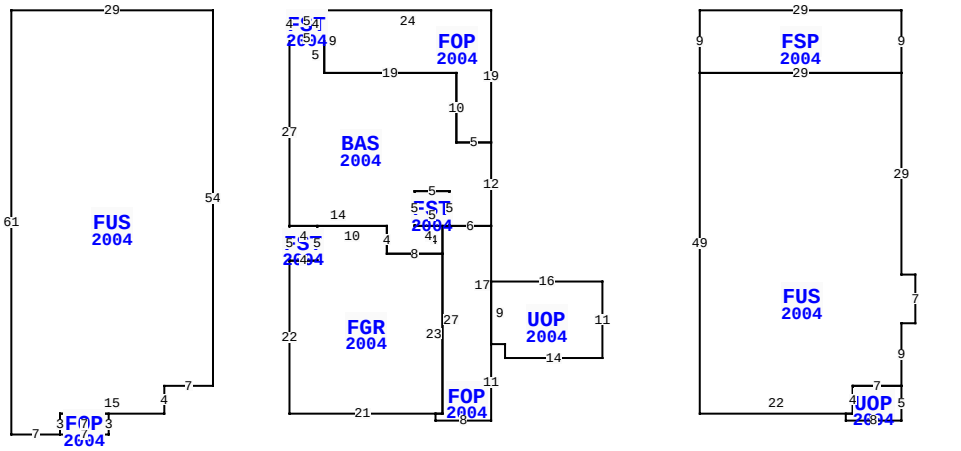

** This building has 13 Sub-Areas

95220 SPRING TIDE LN, FERNANDINA BEACH

BLD DATE		LGL DATE	
XF DATE		LAND DATE	03/13/2024 MLU
INC DATE		AG DATE	

VALUATION SUMMARY

VALUATION BY		STANDARD
Tax Group: 8	Tax Dist:	
BUILDING MARKET VALUE		711,168
TOTAL MARKET OB/XF VALUE		17,759
TOTAL LAND VALUE - MARKET		650,000
TOTAL MARKET VALUE		1,378,927
SOH/AGL Deduction		465,297
ASSESSED VALUE		913,630
TOTAL EXEMPTION VALUE	HX HB	50,722
BASE TAXABLE VALUE		862,908
TOTAL JUST VALUE		1,378,927
NCON VALUE		0
INCOME VALUE		
PREVIOUS YEAR MKT VALUE		1,395,186

PERMIT NUM	DESCRIPTION	AMT	ISSUED

SALES DATA

OFF RECORD Number	DATE	TYPE INST	Q / U	V / I	RSN CD	SALE PRICE
2750/1138	11/14/2024	WD	Q	I	01	1,600,000
GRANTOR: MURDOCK JANIS M						
GRANTEE: WATSON FAMILY TRUST						
2223/1958	9/17/2018	WD	Q	I	01	827,500
GRANTOR: YOUNG REVOCABLE LIVIN						
GRANTEE: MURDOCK RICHARD B &						

BUILDING NOTES

BUILDING DIMENSIONS

FOP=[YR=2004] W24 FST=[YR=2004] W5 S4 BAS=[YR=2004] S27 FST=[YR=2004] S5 FGR=[YR=2004] S22 E21 FOP=[YR=2004] S1 E8 N11 UOP=[YR=2004] E2 S2 E14 N11 W16 S9 $ N17 W6 FST=[YR=2004] N5 W5 S5 E5 $ W1 S27 W1 $ E1 N23 W8 N4 W10 S5 W4 $ E4 N5 W4 $ E14 S4 E8 N4 W4 N5 E5 S5 E6 N12 W5 N10 W19 N5 W5 $ E5 N4 $ S9 E19 S10 E5 N19 $ PTR= E30 FSP=[YR=2004] E29 S9 FUS=[YR=2004] S29 E2 S7 W2 S9 UOP=[YR=2004] S5 W8 N1 E1 N4 E7 $ W7 S4 W22 N49 E29 $ W29 N9 $ W30 $ PTR= W40 FUS=[YR=2004] W29 S61 E7 FOP=[YR=2004] E7 N3 W7 S3 $ N3 E15 N4 E7 N54 $ E40 $.

EXTRA FEATURES

LN	OB/XF CODE	DESCRIPTION	BLD	CAP	L	W	UNITS	UT	Adj R	ADJ UNIT PRICE	ORIG COND	YEAR ON	YEAR ACTUAL	Q	% COND	OB/XF MKT VALUE	NOTES
1	0811	CONCRETE B	0	100	0	0	760.00	SF	5.20	5.20	100	2004	2004	3	83	3,280	
2	0810	CONCRETE A	0	100	15	4	60.00	SF	6.50	6.50	100	2004	2004	3	83	324	
3	0810	CONCRETE A	0	100	0	0	231.00	SF	6.50	6.50	100	2004	2004	3	83	1,246	
4	1126	CB/STC 8"	0	100	16	3	48.00	SF	8.00	8.00	100	2004	2004	3	83	319	
5	0504	FP-ELECTRI	0	100	0	0	1.00	UT	2,000.00	2,000.00	100	2004	2004	3	87	1,740	
6	0410	ELEVATOR	0	100	0	0	1.00	UT	10,000.00	10,000.00	100	2004	2004	3	100	10,000	
7	1126	CB/STC 8"	0	100	0	0	128.00	SF	8.00	8.00	100	2004	2004	3	83	850	

LAND DESCRIPTION

TOTAL OB/XF 17,759

LN	USE CODE	CLS	LAND USE DESCRIPTION	CAP	RD	LOC ZONE	FRONT	DEPTH	TOT LND UTS	UNIT TYPE	DT	DPTH FACT	% COND	TOT ADJ	UNIT PRICE	ADJ UNIT PRICE	LAND VALUE	OTHER ADJUSTMENTS AND NOTES	YEAR	DENSITY	DECL	FRZ	YR	CONSRV
1	000116	C	RES MARSH	100		PUD	0.00	0.00	1.00	LT		1.00	1.00	1.00	650,000.00	650,000.00	650,000							

REVIEW DATE 05/12/2019 BY KBA Total Acres: 0.00 Total Land Value: 650,000 Market: 0 Agricultural: 0 Common: 650,000 PRINTED 07/30/2025 BY SYS