LOT 18
RIVER PLACE @ SUMMER BEACH
PB 6/315

MORIN ROGER A & SUSAN J
95180 SPRING TIDE LN
FERNANDINA BEACH, FL 32034

2025

00-SB-30-185R-0018-0000

BUILDING CHARACTERISTICS

ELEMENT	CD	CONSTRUCTION
Exterior Wall	17	CB STUCCO 100
Roof Structur	08	IRREGULAR 100
Roof Cover	07	CONC TILE 100
Interior Wall	05	DRYWALL 100
Interior Floo	11	CLAY TILE 50
Interior Floo	14	CARPET 50
Air Condition	03	CENTRAL 100
Heating Type	04	AIR DUCTED 100
Bedrooms		3 100
Bathrooms		4 100
Frame	02	WOOD FRAME 100
Stories	3.	3. 100
Units		0 100
Quality	03	Quality Level 03
DOR CODE	0100	SINGLE FAMILY
MAP NUM		MKT AREA 03
NEIGHBORHOOD/LOC	3023.00	

AREA TYPE	TOTAL GROSS AREA	PCT OF BASE	YEAR	TOT ADJ AREA	SUBAREA MARKET VALUE
BAS	620	100	2004	620	100,590
FGR	542	55	2004	298	48,348
FOP	24	30	2004	7	1,136
FOP	197	30	2004	59	9,572
FOP	266	30	2004	80	12,980
FSP	144	40	2004	58	9,410
FSP	261	40	2004	104	16,873
FST	20	55	2004	11	1,785
FST	20	55	2004	11	1,785
FST	25	55	2004	14	2,272
TOTALS	5,139			4,115	667,630

MARKET ADJUSTMENTS

TYPE	MDL	EFF. AREA	TOT ADJ PTS	EFF. BASE RATE	REPL. COST NEW	AYB	EYB	ECON	FNCT		NORM	% COND
0320	12	4,115	180.2680	180.27	741,811	2004	2004	0	0	0	10.00	90.00

1 TOWNHOUSE - 100% - 2024 Heated Area: 3432 HX Base Yr 2024

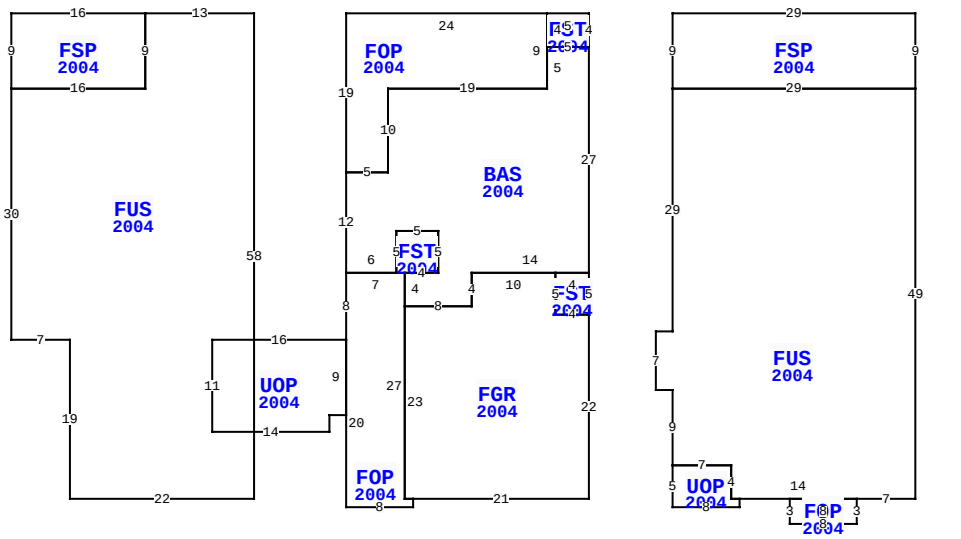

** This building has 14 Sub-Areas

95180 SPRING TIDE LN, FERNANDINA BEACH

BLD DATE		LGL DATE	
XF DATE		LAND DATE	03/13/2024 MLU
INC DATE		AG DATE	

NASSAU COUNTY PROPERTY

PAGE 1 of 1 8

VALUATION SUMMARY

VALUATION BY		STANDARD
Tax Group: 8	Tax Dist:	
BUILDING MARKET VALUE		667,630
TOTAL MARKET OB/XF VALUE		16,262
TOTAL LAND VALUE - MARKET		650,000
TOTAL MARKET VALUE		1,333,892
SOH/AGL Deduction		460,159
ASSESSED VALUE		873,733
TOTAL EXEMPTION VALUE	HX HB	50,722
BASE TAXABLE VALUE		823,011
TOTAL JUST VALUE		1,333,892
NCON VALUE		0
INCOME VALUE		
PREVIOUS YEAR MKT VALUE		1,349,109

PERMIT NUM	DESCRIPTION	AMT	ISSUED

SALES DATA

OFF RECORD Number	DATE	TYPE INST	Q U	V I	RSN CD	SALE PRICE
2629/1516	4/03/2023	WD	Q	I	01	1,550,000
GRANTOR: HAYDEN WILLIAM C & SH						
GRANTEE: MORIN ROGER A & SUS						
2448/0418	3/31/2021	WD	Q	I	01	870,000
GRANTOR: FROGALE ROBERT J & LA						
GRANTEE: HAYDEN WILLIAM C &						

BUILDING NOTES

EXTRA FEATURES

LN	OB/XF CODE	DESCRIPTION	BLD	CAP	L	W	UNITS	UT	Adj R	ADJ UNIT PRICE	ORIG COND	YEAR ON	YEAR ACTUAL	Q	% COND	OB/XF MKT VALUE	NOTES
1	0811	CONCRETE B	0	100	0	0	578.00	SF	5.20	5.20	100	2004	2004	3	83	2,495	
2	0810	CONCRETE A	0	100	15	4	60.00	SF	6.50	6.50	100	2004	2004	3	83	324	
3	0810	CONCRETE A	0	100	0	0	195.00	SF	6.50	6.50	100	2004	2004	3	83	1,052	
4	1126	CB/STC 8"	0	100	0	0	98.00	SF	8.00	8.00	100	2004	2004	3	83	651	
5	0504	FP-ELECTRI	0	100	0	0	1.00	UT	2,000.00	2,000.00	100	2004	2004	3	87	1,740	
6	0410	ELEVATOR	0	100	0	0	1.00	UT	10,000.00	10,000.00	100	2004	2004	3	100	10,000	

BUILDING DIMENSIONS

FST=[YR=2004] W5 FOP=[YR=2004] W24 S19 BAS=[YR=2004] S12 FOP=[YR=2004] S8 UOP=[YR=2004] W16 S11 E14 N2 E2 N9 $ S20 E8 N1 FGR=[YR=2004] E21 N22 FST=[YR=2004] N5 W4 S5 E4 $ W4 N5 W10 S4 W8 S23 E1 $ W1 N27 FST=[YR=2004] E4 N5 W5 S5 E1 $ W7 $ E6 N5 E5 S5 W4 S4 E8 N4 E14 N27 W5 S5 W19 S10 W5 $ E5 N10 E19 N9 $ S4 E5 N4 $ PTR= E10 FSP=[YR=2004] E29 S9 FUS=[YR=2004] S49 W7 FOP=[YR=2004] S3 W8 N3 E8 $ W14 UOP=[YR=2004] S1 W8 N5 E7 S4 E1 $ W1 N4 W7 N9 W2 N7 E2 N29 E29 $ W29 N9 $ W10 $ PTR= W40 FUS=[YR=2004] W13 FSP=[YR=2004] W16 S9 E16 N9 $ S9 W16 S30 E7 S19 E22 N58 $ E40 $.

LAND DESCRIPTION

TOTAL OB/XF 16,262

LN	USE CODE	CLS	LAND USE DESCRIPTION	CAP	RD	LOC ZONE	FRONT	DEPTH	TOT LND UTS	UNIT TYPE	DT	DPTH FACT	% COND	TOT ADJ	UNIT PRICE	ADJ UNIT PRICE	LAND VALUE	OTHER ADJUSTMENTS AND NOTES	YEAR	DENSITY	DECL	FRZ	YR	CONSRV
1	000116	C	RES MARSH	100		PUD	0.00	0.00	1.00	LT		1.00	1.00	1.00	650,000.00	650,000.00	650,000							

REVIEW DATE 05/12/2019 BY KBA Total Acres: 0.00 Total Land Value: 650,000 Market: 0 Agricultural: 0 Common: 650,000 PRINTED 07/30/2025 BY SYS