LOT 14
IN OR 1894/1155
RIVER PLACE @ SUMMER BEACH

ARNOLD DEVON D
95146 SPRING TIDE LN
FERNANDINA BEACH, FL 32034

**2025**

**00-SB-30-185R-0014-0000**

## BUILDING CHARACTERISTICS

| ELEMENT | CD | CONSTRUCTION |
|---|---|---|
| Exterior Wall | 17 | CB STUCCO 100 |
| Roof Structur | 08 | IRREGULAR 100 |
| Roof Cover | 07 | CONC TILE 100 |
| Interior Wall | 05 | DRYWALL 100 |
| Interior Floo | 11 | CLAY TILE 50 |
| Interior Floo | 14 | CARPET 50 |
| Air Condition | 03 | CENTRAL 100 |
| Heating Type | 04 | AIR DUCTED 100 |
| Bedrooms | | 3 100 |
| Bathrooms | | 4 100 |
| Frame | 02 | WOOD FRAME 100 |
| Stories | 3. | 3. 100 |
| Units | | 0 100 |
| Quality | 03 | Quality Level 03 |
| DOR CODE | 0100 | SINGLE FAMILY |
| MAP NUM | | MKT AREA 03 |
| NEIGHBORHOOD/LOC | 3023.00 | |

| AREA TYPE | TOTAL GROSS AREA | PCT OF BASE | YEAR | TOT ADJ AREA | SUBAREA MARKET VALUE |
|---|---|---|---|---|---|
| BAS | 620 | 100 | 2004 | 620 | 100,590 |
| BAS | 144 | 100 | 2016 | 144 | 23,363 |
| FGR | 542 | 55 | 2004 | 298 | 48,348 |
| FOP | 24 | 30 | 2004 | 7 | 1,136 |
| FOP | 197 | 30 | 2004 | 59 | 9,572 |
| FOP | 266 | 30 | 2004 | 80 | 12,980 |
| FSP | 261 | 40 | 2004 | 104 | 16,873 |
| FST | 20 | 55 | 2004 | 11 | 1,785 |
| FST | 20 | 55 | 2004 | 11 | 1,785 |
| FST | 25 | 55 | 2004 | 14 | 2,272 |
| TOTALS | 5,106 | | | 4,195 | 680,610 |

## MARKET ADJUSTMENTS

| TYPE | MDL | EFF. AREA | TOT ADJ PTS | EFF. BASE RATE | REPL. COST NEW | AYB | EYB | ECON | FNCT | | NORM | % COND |
|---|---|---|---|---|---|---|---|---|---|---|---|---|
| 0320 | 12 | 4,195 | 180.2680 | 180.27 | 756,233 | 2004 | 2004 | 0 | 0 | 0 | 10.00 | 90.00 |

1 TOWNHOUSE - 0% - 0 Heated Area: 3576 HX Base Yr

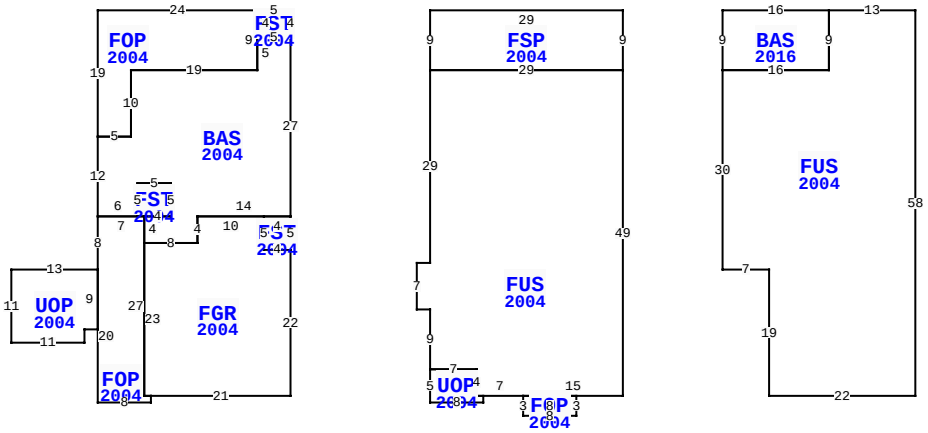


** This building has 14 Sub-Areas

95146 SPRING TIDE LN, FERNANDINA BEACH

| | | | |
|---|---|---|---|
| BLD DATE | | LGL DATE | |
| XF DATE | | LAND DATE | 03/13/2024 MLU |
| INC DATE | | AG DATE | |

## NASSAU COUNTY PROPERTY

PAGE 1 of 1 8

### VALUATION SUMMARY

| | |
|---|---|
| VALUATION BY | STANDARD |
| Tax Group: 8 | Tax Dist: |
| BUILDING MARKET VALUE | 680,610 |
| TOTAL MARKET OB/XF VALUE | 16,475 |
| TOTAL LAND VALUE - MARKET | 650,000 |
| TOTAL MARKET VALUE | 1,347,085 |
| SOH/AGL Deduction | 412,618 |
| ASSESSED VALUE | 934,467 |
| TOTAL EXEMPTION VALUE | 0 |
| BASE TAXABLE VALUE | 934,467 |
| TOTAL JUST VALUE | 1,347,085 |
| NCON VALUE | 0 |
| INCOME VALUE | |
| PREVIOUS YEAR MKT VALUE | 1,362,598 |

| PERMIT NUM | DESCRIPTION | AMT | ISSUED |
|---|---|---|---|
| B1631914 | ADDITION | 13,008 | 03/09/2016 |

## SALES DATA

| OFF RECORD Number | DATE | TYPE INST | Q / U | V / I | RSN CD | SALE PRICE |
|---|---|---|---|---|---|---|
| 1894/1155 | 12/20/2013 | WD | Q | I | 01 | 572,500 |
| GRANTOR: DRAMAN MICHAEL TRUSTE | | | | | | |
| GRANTEE: ARNOLD DEVON D | | | | | | |
| 1828/1446 | 12/05/2012 | QC | U | I | 11 | 100 |
| GRANTOR: DRAMAN MICHAEL | | | | | | |
| GRANTEE: DRAMAN MICHAEL TRUS | | | | | | |

## BUILDING NOTES

## EXTRA FEATURES

| LN | OB/XF CODE | DESCRIPTION | BLD | CAP | L | W | UNITS | UT | Adj R | ADJ UNIT PRICE | ORIG COND | YEAR ON | YEAR ACTUAL | Q | % COND | OB/XF MKT VALUE | NOTES |
|---|---|---|---|---|---|---|---|---|---|---|---|---|---|---|---|---|---|
| 1 | 0811 | CONCRETE B | 0 | 0 | 0 | 0 | 578.00 | SF | 5.20 | 5.20 | 100 | 2004 | 2004 | 3 | 83 | 2,495 | |
| 2 | 0810 | CONCRETE A | 0 | 0 | 15 | 4 | 60.00 | SF | 6.50 | 6.50 | 100 | 2004 | 2004 | 3 | 83 | 324 | |
| 3 | 0810 | CONCRETE A | 0 | 0 | 0 | 0 | 226.00 | SF | 6.50 | 6.50 | 100 | 2004 | 2004 | 3 | 83 | 1,219 | |
| 4 | 1126 | CB/STC 8" | 0 | 0 | 0 | 0 | 105.00 | SF | 8.00 | 8.00 | 100 | 2004 | 2004 | 3 | 83 | 697 | |
| 5 | 0410 | ELEVATOR | 0 | 0 | 0 | 0 | 1.00 | UT | 10,000.00 | 10,000.00 | 100 | 2004 | 2004 | 3 | 100 | 10,000 | |
| 6 | 0504 | FP-ELECTRI | 0 | 0 | 0 | 0 | 1.00 | UT | 2,000.00 | 2,000.00 | 100 | 2004 | 2004 | 3 | 87 | 1,740 | |

## BUILDING DIMENSIONS

FSP=[YR=2004] W29 S9 FUS=[YR=2004] S29 W2 S7 E2 S9 UOP=[YR=2004] S5 E8 N1 W1 N4 W7 $ E7 S4 E7 FOP=[YR=2004] S3 E8 N3 W8 $ E15 N49 W29 $ E29 N9 $ PTR= E15 BAS=[YR=2016] E16 FUS=[YR=2004] E13 S58 W22 N19 W7 N30 E16 N9 $ S9 W16 N9 $ W15 $ PTR= W50 FST=[YR=2004] W5 FOP=[YR=2004] W24 S19 BAS=[YR=2004] S12 FOP=[YR=2004] S8 UOP=[YR=2004] W13 S11 E11 N2 E2 N9 $ S20 E8 N1 FGR=[YR=2004] E21 N22 FST=[YR=2004] N5 W4 S5 E4 $ W4 N5 W10 S4 W8 S23 E1 $ W1 N27 FST=[YR=2004] E4 N5 W5 S5 E1 $ W7 $ E6 N5 E5 S5 W4 S4 E8 N4 E14 N27 W5 S5 W19 S10 W5 $ E5 N10 E19 N9 $ S4 E5 N4 $ E50 $ .

## LAND DESCRIPTION

TOTAL OB/XF 16,475

| LN | USE CODE | CLS | LAND USE DESCRIPTION | CAP | RD | LOC ZONE | FRONT | DEPTH | TOT LND UTS | UNIT TYPE | DT | DPTH FACT | % COND | TOT ADJ | UNIT PRICE | ADJ UNIT PRICE | LAND VALUE | OTHER ADJUSTMENTS AND NOTES | YEAR | DENSITY | DECL | FRZ | YR | CONSRV |
|---|---|---|---|---|---|---|---|---|---|---|---|---|---|---|---|---|---|---|---|---|---|---|---|---|
| 1 | 000116 | C | RES MARSH | 0 | | PUD | 0.00 | 0.00 | 1.00 | LT | | 1.00 | 1.00 | 1.00 | 650,000.00 | 650,000.00 | 650,000 | | | | | | | |

REVIEW DATE 01/14/2021 BY KBA Total Acres: 0.00 Total Land Value: 650,000 Market: 0 Agricultural: 0 Common: 650,000 PRINTED 07/30/2025 BY SYS