LOT 10
IN OR 1792/1132
RIVER PLACE @ SUMMER BEACH

BRUMFIELD CRAIG A
95106 SPRING TIDE LN
FERNANDINA BEACH, FL 32034

2025

00-SB-30-185R-0010-0000

BUILDING CHARACTERISTICS

ELEMENT	CD	CONSTRUCTION
Exterior Wall	17	CB STUCCO 100
Roof Structur	08	IRREGULAR 100
Roof Cover	07	CONC TILE 100
Interior Wall	05	DRYWALL 100
Interior Floo	11	CLAY TILE 70
Interior Floo	14	CARPET 30
Air Condition	03	CENTRAL 100
Heating Type	04	AIR DUCTED 100
Bedrooms		3 100
Bathrooms		4 100
Frame	02	WOOD FRAME 100
Stories	3.	3. 100
Units		0 100
Quality	03	Quality Level 03
DOR CODE	0100	SINGLE FAMILY
MAP NUM		MKT AREA 03
NEIGHBORHOOD/LOC	3023.00	

AREA TYPE	TOTAL GROSS AREA	PCT OF BASE	YEAR	TOT ADJ AREA	SUBAREA MARKET VALUE
BAS	620	100	2003	620	102,190
BAS	144	100	2011	144	23,735
FGR	542	55	2003	298	49,118
FOP	24	30	2003	7	1,154
FOP	197	30	2003	59	9,724
FSP	266	40	2003	106	17,471
FSP	261	40	2011	104	17,142
FST	20	55	2003	11	1,813
FST	20	55	2003	11	1,813
FST	25	55	2003	14	2,307
TOTALS	5,128			4,225	696,378

MARKET ADJUSTMENTS

TYPE	MDL	EFF. AREA	TOT ADJ PTS	EFF. BASE RATE	REPL. COST NEW	AYB	EYB	ECON	FNCT		NORM	% COND
0320	12	4,225	184.1576	184.16	778,076	2003	2003	0	0	0	10.50	89.50

1 TOWNHOUSE - 100% - 2013 Heated Area: 3576 HX Base Yr 2013

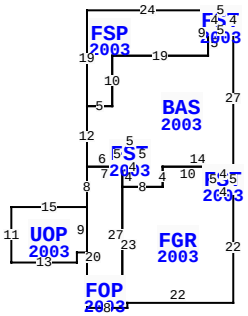

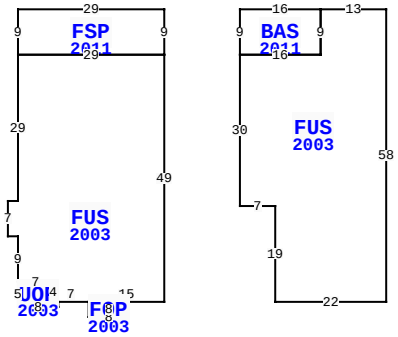

** This building has 14 Sub-Areas

95106 SPRING TIDE LN, FERNANDINA BEACH

BLD DATE		LGL DATE	
XF DATE		LAND DATE	03/13/2024 MLU
INC DATE		AG DATE	

NASSAU COUNTY PROPERTY

PAGE 1 of 1 8

VALUATION SUMMARY

VALUATION BY		STANDARD
Tax Group: 8	Tax Dist:	
BUILDING MARKET VALUE		696,378
TOTAL MARKET OB/XF VALUE		17,631
TOTAL LAND VALUE - MARKET		650,000
TOTAL MARKET VALUE		1,364,009
SOH/AGL Deduction		820,899
ASSESSED VALUE		543,110
TOTAL EXEMPTION VALUE	HX HB	50,722
BASE TAXABLE VALUE		492,388
TOTAL JUST VALUE		1,364,009
NCON VALUE		0
INCOME VALUE		
PREVIOUS YEAR MKT VALUE		1,379,940

PERMIT NUM	DESCRIPTION	AMT	ISSUED

SALES DATA

OFF RECORD Number	DATE	TYPE INST	Q / U	V / I	RSN CD	SALE PRICE
1792/1132	4/24/2012	WD	Q	I	01	535,000
GRANTOR: FENDER KATHRYN J						
GRANTEE: BRUMFIELD CRAIG A						
1199/1634	1/06/2004	WD	U	I	21	890,400
GRANTOR: RIVER PLACE AT SUMMER						
GRANTEE: FENDER ROBERT R & K						

BUILDING NOTES

BUILDING DIMENSIONS

FSP=[YR=2011] W29 S9 FUS=[YR=2003] S29 W2 S7 E2 S9
UOP=[YR=2003] S5 E8 N1 W1 N4 W7 $ E7 S4 E7 FOP=[YR=2003] S3
E8 N3 W8 $ E15 N49 W29 $ E29 N9 $ PTR= E15 BAS=[YR=2011] E16
FUS=[YR=2003] E13 S58 W22 N19 W7 N30 E16 N9 $ S9 W16 N9 $
W15$ PTR= N10 FGR=[YR=2003] N22 FST=[YR=2003] N5
BAS=[YR=2003] N27 FST=[YR=2003] N4 W5 FSP=[YR=2003] W24
S19 E5 N10 E19 N9 $ S4 E5 $ W5 S5 W19 S10 W5 S12
FOP=[YR=2003] S8 UOP=[YR=2003] W15 S11 E13 N2 E2 N9 $ S20
E8 N1 W1 N27 FST=[YR=2003] E4 N5 W5 S5 E1 $ W7 $ E6 N5 E5 S5
W4 S4 E8 N4 E14$ W4 S5 E4 $ W4 N5 W10 S4 W8 S23 E22 $ S10 $.

EXTRA FEATURES

LN	OB/XF CODE	DESCRIPTION	BLD	CAP	L	W	UNITS	UT	Adj R	ADJ UNIT PRICE	ORIG COND	YEAR ON	YEAR ACTUAL	Q	% COND	OB/XF MKT VALUE	NOTES
1	0504	FP-ELECTRI	0	100	0	0	1.00	UT	2,000.00	2,000.00	100	2003	2003	3	86	1,720	
2	0810	CONCRETE A	0	100	0	0	483.00	SF	6.50	6.50	100	2003	2003	3	82	2,574	
3	0810	CONCRETE A	0	100	15	4	60.00	SF	6.50	6.50	100	2003	2003	3	82	320	
4	0810	CONCRETE A	0	100	0	0	392.00	SF	6.50	6.50	100	2003	2003	3	82	2,089	
5	0410	ELEVATOR	0	100	0	0	1.00	UT	10,000.00	10,000.00	100	2003	2003	3	100	10,000	
6	1126	CB/STC 8"	0	100	0	0	111.00	SF	8.00	8.00	100	2003	2003	3	82	728	
7	0877	JACUZZI	0	100	0	0	1.00	UT	1,000.00	1,000.00	100	2003	2003	3	20	200	

LAND DESCRIPTION

TOTAL OB/XF 17,631

LN	USE CODE	CLS	LAND USE DESCRIPTION	CAP	RD	LOC ZONE	FRONT	DEPTH	TOT LND UTS	UNIT TYPE	DT	DPTH FACT	% COND	TOT ADJ	UNIT PRICE	ADJ UNIT PRICE	LAND VALUE	OTHER ADJUSTMENTS AND NOTES	YEAR	DENSITY	DECL	FRZ	YR	CONSRV
1	000116	C	RES MARSH	100		PUD	0.00	0.00	1.00	LT		1.00	1.00	1.00	650,000.00	650,000.00	650,000							

REVIEW DATE 05/12/2019 BY KBA Total Acres: 0.00 Total Land Value: 650,000 Market: 0 Agricultural: 0 Common: 650,000 PRINTED 07/30/2025 BY SYS