LOT 7
F/K/A LOT 7 RIVER PLACE @
SUMMER BEACH PB 6/315-317

LITTLE DOROTHY & WILLIAM
95082 SPRING TIDE LN
FERNANDINA BEACH, FL 32034

2025

00-SB-30-185R-0007-0000

BUILDING CHARACTERISTICS

ELEMENT	CD	CONSTRUCTION
Exterior Wall	17	CB STUCCO 100
Roof Structur	03	GABLE/HIP 100
Roof Cover	07	CONC TILE 100
Interior Wall	05	DRYWALL 100
Interior Floo	11	CLAY TILE 50
Interior Floo	14	CARPET 50
Air Condition	03	CENTRAL 100
Heating Type	04	AIR DUCTED 100
Bedrooms		4 100
Bathrooms		4 100
Frame	02	WOOD FRAME 100
Stories	3.	3. 100
Units		0 100
Quality	03	Quality Level 03
DOR CODE	0100	SINGLE FAMILY
MAP NUM		MKT AREA 03
NEIGHBORHOOD/LOC	3023.00	

AREA TYPE	TOTAL GROSS AREA	PCT OF BASE	YEAR	TOT ADJ AREA	SUBAREA MARKET VALUE
BAS	620	100	2003	620	98,373
FGR	542	55	2003	298	47,282
FOP	21	30	2003	6	952
FOP	144	30	2003	43	6,823
FOP	197	30	2003	59	9,362
FOP	261	30	2003	78	12,376
FOP	266	30	2003	80	12,693
FST	20	55	2003	11	1,745
FST	20	55	2003	11	1,745
FST	25	55	2003	14	2,221
TOTALS	5,251			4,197	665,919

MARKET ADJUSTMENTS

TYPE	MDL	EFF. AREA	TOT ADJ PTS	EFF. BASE RATE	REPL. COST NEW	AYB	EYB	ECON	FNCT		NORM	% COND
0320	12	4,197	177.2760	177.28	744,044	2003	2003	0	0	0	10.50	89.50

1 TOWNHOUSE - 100% - 2019 Heated Area: 3558 HX Base Yr 2019

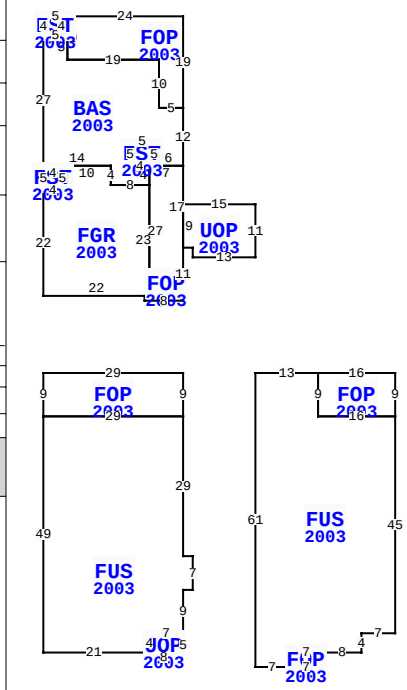

** This building has 14 Sub-Areas

BLD DATE		LGL DATE	
XF DATE		LAND DATE	03/13/2024 MLU
INC DATE		AG DATE	

95082 SPRING TIDE LN, FERNANDINA BEACH

EXTRA FEATURES

LN	OB/XF CODE	DESCRIPTION	BLD	CAP	L	W	UNITS	UT	Adj R	ADJ UNIT PRICE	ORIG COND	YEAR ON	YEAR ACTUAL	Q	% COND	OB/XF MKT VALUE	NOTES
1	0504	FP-ELECTRI	0	100	0	0	1.00	UT	2,000.00	2,000.00	100	2003	2003	3	86	1,720	
2	0811	CONCRETE B	0	100	0	0	590.00	SF	5.20	5.20	100	2003	2003	3	82	2,516	
3	0810	CONCRETE A	0	100	14	4	56.00	SF	6.50	6.50	100	2003	2003	3	82	298	
4	0810	CONCRETE A	0	100	0	0	224.00	SF	6.50	6.50	100	2003	2003	3	82	1,194	
5	0410	ELEVATOR	0	100	0	0	1.00	UT	10,000.00	10,000.00	100	2003	2003	3	100	10,000	
6	1126	CB/STC 8"	0	100	30	7	210.00	SF	8.00	8.00	100	2003	2003	3	82	1,378	

NASSAU COUNTY PROPERTY

VALUATION SUMMARY

VALUATION BY		STANDARD
Tax Group: 8	Tax Dist:	
BUILDING MARKET VALUE		665,919
TOTAL MARKET OB/XF VALUE		17,106
TOTAL LAND VALUE - MARKET		650,000
TOTAL MARKET VALUE		1,333,025
SOH/AGL Deduction		659,238
ASSESSED VALUE		673,787
TOTAL EXEMPTION VALUE	HX HB	50,722
BASE TAXABLE VALUE		623,065
TOTAL JUST VALUE		1,333,025
NCON VALUE		0
INCOME VALUE		
PREVIOUS YEAR MKT VALUE		1,348,237

PERMIT NUM	DESCRIPTION	AMT	ISSUED

SALES DATA

OFF RECORD Number	DATE	TYPE INST	Q U	V I	RSN CD	SALE PRICE
2217/1113	8/13/2018	WD	Q	I	02	750,000
GRANTOR: HALEY JOSEPH A III &						
GRANTEE: LITTLE DOROTHY & WI						
1964/1923	2/27/2015	WD	Q	I	01	500,000
GRANTOR: AMIN MARGIE						
GRANTEE: HALEY JOSEPH A III						

BUILDING NOTES

BUILDING DIMENSIONS

FOP=[YR=2003] W29 S9 FUS=[YR=2003] S49 E21 UOP=[YR=2003] S1 E8 N5 W7 S4 W1 $ E1 N4 E7 N9 E2 N7 W2 N29 W29 $ E29 N9 $ PTR= E15 FUS=[YR=2003] E13 FOP=[YR=2003] E16 S9 W16 N9 $ S9 E16 S45 W7 S4 W8 FOP=[YR=2003] S3 W7 N3 E7 $W7 S3 W7 N61 $W15 $ PTR= N15 FOP=[YR=2003] N11 UOP=[YR=2003] E2 S2 E13 N11 W15 S9 $ N17 BAS=[YR=2003] N12 FOP=[YR=2003] N19 W24 FST=[YR=2003] W5 S4 E5 N4 $ S9 E19 S10 E5 $ W5 N10 W19 N5 W5 S27 FST=[YR=2003] S5 FGR=[YR=2003] S22 E22 N23 W8 N4 W10 S5 W4 $ E4 N5 W4 $ E14 S4 E8 N4 FST=[YR=2003] E1 N5 W5 S5 E4$ W4 N5 E5 S5 E6 $ W7 S27 W1 S1 E8 $ S15 $.

LAND DESCRIPTION

TOTAL OB/XF 17,106

LN	USE CODE	CLS	LAND USE DESCRIPTION	CAP	RD	LOC ZONE	FRONT	DEPTH	TOT LND UTS	UNIT TYPE	DT	DPTH FACT	% COND	TOT ADJ	UNIT PRICE	ADJ UNIT PRICE	LAND VALUE	OTHER ADJUSTMENTS AND NOTES	YEAR	DENSITY	DECL	FRZ	YR	CONSRV
1	000116	C	RES MARSH	100		PUD	0.00	0.00	1.00	LT		1.00	1.00	1.00	650,000.00	650,000.00	650,000							

REVIEW DATE 05/12/2019 BY KBA Total Acres: 0.00 Total Land Value: 650,000 Market: 0 Agricultural: 0 Common: 650,000 PRINTED 07/30/2025 BY SYS