LOT 20
PRESERVE @ SUMMER BEACH #1A
PB 6/399

KIEBLER TRUST/KIEBLER PATRICIA A TRUSTEE
95026 WILLET WAY
FERNANDINA BEACH, FL 32034

**2025**

**00-SB-30-1671-0020-0000**

## BUILDING CHARACTERISTICS

| ELEMENT | CD | CONSTRUCTION |
|---|---|---|
| Exterior Wall | 16 | WD FR STUC 70 |
| Exterior Wall | 15 | CONC BLOCK 30 |
| Roof Structur | 08 | IRREGULAR 100 |
| Roof Cover | 07 | CONC TILE 100 |
| Interior Wall | 05 | DRYWALL 100 |
| Interior Floo | 14 | CARPET 60 |
| Interior Floo | 11 | CLAY TILE 40 |
| Air Condition | 03 | CENTRAL 100 |
| Heating Type | 04 | AIR DUCTED 100 |
| Bedrooms | | 4 100 |
| Bathrooms | | 4.5 100 |
| Frame | 02 | WOOD FRAME 100 |
| Stories | 2. | 2. 100 |
| Units | | 0 100 |
| Quality | 04 | Quality Level 04 |
| DOR CODE | 0100 | SINGLE FAMILY |
| MAP NUM | | MKT AREA 03 |
| NEIGHBORHOOD/LOC | 3021.00 | |

| AREA TYPE | TOTAL GROSS AREA | PCT OF BASE | YEAR | TOT ADJ AREA | SUBAREA MARKET VALUE |
|---|---|---|---|---|---|
| BAS | 306 | 100 | 2005 | 306 | 63,339 |
| BAS | 1,895 | 100 | 2005 | 1,895 | 392,249 |
| DCK | 153 | 10 | 2005 | 15 | 3,105 |
| FGR | 462 | 55 | 2005 | 254 | 52,576 |
| FOP | 527 | 30 | 2005 | 158 | 32,705 |
| FUS | 838 | 100 | 2005 | 838 | 173,459 |
| UOP | 75 | 20 | 2005 | 15 | 3,105 |
| TOTALS | 4,256 | | | 3,481 | 720,537 |

## MARKET ADJUSTMENTS

| TYPE | MDL | EFF. AREA | TOT ADJ PTS | EFF. BASE RATE | REPL. COST NEW | AYB | EYB | ECON | FNCT | | NORM | % COND |
|---|---|---|---|---|---|---|---|---|---|---|---|---|
| 0500 | 11 | 3,481 | 144.7565 | 228.72 | 796,174 | 2005 | 2005 | 0 | 0 | 0 | 9.50 | 90.50 |

1 SFR CUST – 100% - 2016 Heated Area: 3039 HX Base Yr 2016

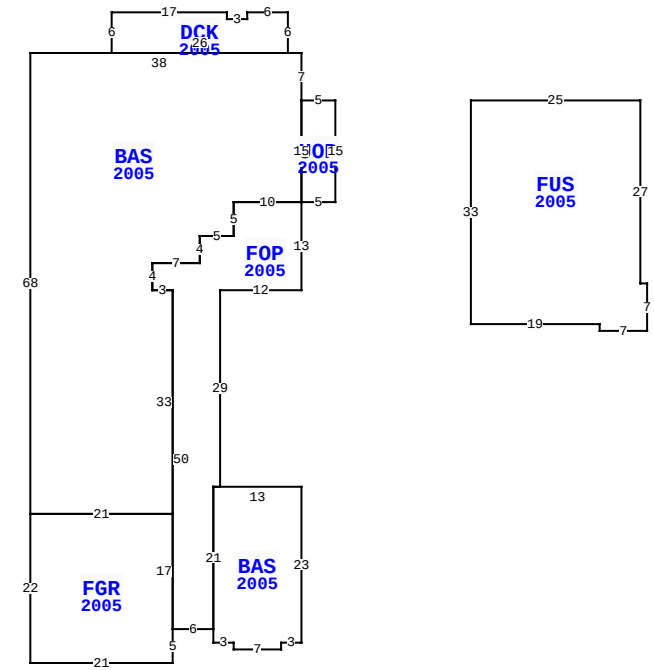


95026 WILLET WAY, FERNANDINA BEACH

| | | | |
|---|---|---|---|
| BLD DATE | | LGL DATE | |
| XF DATE | | LAND DATE | |
| INC DATE | | AG DATE | |

## NASSAU COUNTY PROPERTY



### VALUATION SUMMARY

| | | |
|---|---|---|
| VALUATION BY | | STANDARD |
| Tax Group: 8 | Tax Dist: | |
| BUILDING MARKET VALUE | | 720,537 |
| TOTAL MARKET OB/XF VALUE | | 7,937 |
| TOTAL LAND VALUE - MARKET | | 135,000 |
| TOTAL MARKET VALUE | | 863,474 |
| SOH/AGL Deduction | | 349,881 |
| ASSESSED VALUE | | 513,593 |
| TOTAL EXEMPTION VALUE | WX HX HB | 55,722 |
| BASE TAXABLE VALUE | | 457,871 |
| TOTAL JUST VALUE | | 863,474 |
| NCON VALUE | | 0 |
| INCOME VALUE | | |
| PREVIOUS YEAR MKT VALUE | | 830,891 |

| PERMIT NUM | DESCRIPTION | AMT | ISSUED |
|---|---|---|---|
| E0414098 | ELEC OTHER | 2,000 | 12/01/2004 |
| M0409015 | H/AC | 0 | 12/01/2004 |
| R046969 | REPAIR/RRF | 18,000 | 12/01/2004 |

## SALES DATA

| OFF RECORD Number | DATE | TYPE INST | Q U | V I | RSN CD | SALE PRICE |
|---|---|---|---|---|---|---|
| 2726/1448 | 7/11/2024 | SW | U | I | 11 | 100 |
| GRANTOR: KIEBLER ROBERT E & PA | | | | | | |
| GRANTEE: KIEBLER TRUST | | | | | | |
| 1937/1793 | 9/17/2014 | WD | Q | I | 02 | 535,000 |
| GRANTOR: INGLEE WILLIAM B & MA | | | | | | |
| GRANTEE: KIEBLER ROBERT E & | | | | | | |

## BUILDING NOTES

## BUILDING DIMENSIONS

UOP=[YR=2005] W5 BAS=[YR=2005] N7 W2 DCK=[YR=2005] N6 W6 S1 W3 N1 W17 S6 E26$ W38 S68 FGR=[YR=2005] S22 E21 N5 FOP=[YR=2005] E6 BAS=[YR=2005] S2 E3 S1 E7 N1 E3 N23 W13 S21$ N21 E1 N29 E12 N13 W10 S5 W5 S4 W7 S4 E3 S50$ N17 W21$ E21 N33 W3 N4 E7 N4 E5 N5 E10 N15$ S15 E5 N15$ PTR=E20 FUS=[YR=2005] E25 S27 E1 S7 W7 N1 W19 N33$ W20$ .

## EXTRA FEATURES

| LN | OB/XF CODE | DESCRIPTION | BLD | CAP | L | W | UNITS | UT | Adj R | ADJ UNIT PRICE | ORIG COND | YEAR ON | YEAR ACTUAL | Q | % COND | OB/XF MKT VALUE | NOTES |
|---|---|---|---|---|---|---|---|---|---|---|---|---|---|---|---|---|---|
| 1 | 0500 | FP-PRE FAB | 0 | 100 | 0 | 0 | 1.00 | UT | 3,500.00 | 3,500.00 | 100 | 2005 | 2005 | 3 | 88 | 3,080 | |
| 2 | 0810 | CONCRETE A | 0 | 100 | 0 | 0 | 399.00 | SF | 6.50 | 6.50 | 100 | 2005 | 2005 | 3 | 84 | 2,179 | |
| 3 | 0810 | CONCRETE A | 0 | 100 | 18 | 4 | 72.00 | SF | 6.50 | 6.50 | 100 | 2005 | 2005 | 3 | 84 | 393 | |
| 4 | 1126 | CB/STC 8" | 0 | 100 | 0 | 0 | 340.00 | SF | 8.00 | 8.00 | 100 | 2005 | 2005 | 3 | 84 | 2,285 | |

## LAND DESCRIPTION

TOTAL OB/XF 7,937

| LN | USE CODE | CLS | LAND USE DESCRIPTION | CAP | RD | LOC ZONE | FRONT | DEPTH | TOT LND UTS | UNIT TYPE | DT | DPTH FACT | % COND | TOT ADJ | UNIT PRICE | ADJ UNIT PRICE | LAND VALUE | OTHER ADJUSTMENTS AND NOTES | YEAR | DENSITY | DECL | FRZ | YR | CONSRV |
|---|---|---|---|---|---|---|---|---|---|---|---|---|---|---|---|---|---|---|---|---|---|---|---|---|
| 1 | 000100 | C | RES | 100 | | PUD | 0.00 | 0.00 | 1.00 | LT | | 1.00 | 1.00 | 1.00 | 135,000.00 | 135,000.00 | 135,000 | | | | | | | |

REVIEW DATE 08/19/2019 BY DJA Total Acres: 0.00 Total Land Value: 135,000 Market: 0 Agricultural: 0 Common: 135,000 PRINTED 07/30/2025 BY SYS