LOT 14
PRESERVE @ SUMMER BEACH #1A
PB 6/399

PROSPER REAL ESTATE HOLDINGS
95015 WILLET WAY
FERNANDINA BEACH, FL 32034

2025

00-SB-30-1671-0014-0000

NASSAU COUNTY PROPERTY

BUILDING CHARACTERISTICS

ELEMENT	CD	CONSTRUCTION
Exterior Wall	16	WD FR STUC 70
Exterior Wall	15	CONC BLOCK 30
Roof Structur	08	IRREGULAR 100
Roof Cover	07	CONC TILE 100
Interior Wall	05	DRYWALL 100
Interior Floo	11	CLAY TILE 60
Interior Floo	14	CARPET 40
Air Condition	03	CENTRAL 100
Heating Type	04	AIR DUCTED 100
Bedrooms		5 100
Bathrooms		4 100
Frame	02	WOOD FRAME 100
Stories	2.	2. 100
Units		0 100
Quality	04	Quality Level 04

DOR CODE 0100 SINGLE FAMILY
MAP NUM | MKT AREA 03
NEIGHBORHOOD/LOC 3021.00

AREA TYPE	TOTAL GROSS AREA	PCT OF BASE	YEAR	TOT ADJ AREA	SUBAREA MARKET VALUE
BAS	306	100	2005	306	64,190
BAS	1,892	100	2005	1,892	396,885
DCK	150	10	2005	15	3,147
FGR	462	55	2005	254	53,282
FOP	554	30	2005	166	34,822
FSP	72	40	2005	29	6,083
FUS	811	100	2005	811	170,124
UOP	50	20	2005	10	2,098
TOTALS	4,297			3,483	730,629

MARKET ADJUSTMENTS

TYPE	MDL	EFF. AREA	TOT ADJ PTS	EFF. BASE RATE	REPL. COST NEW	AYB	EYB	ECON	FNCT		NORM	% COND
0500	11	3,483	146.6995	231.79	807,325	2005	2005	0	0	0	9.50	90.50

1 SFR CUST – 0% - 2024 Heated Area: 3009 HX Base Yr

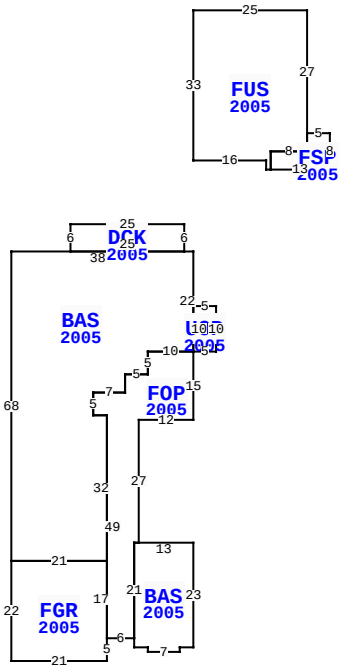

95015 WILLET WAY, FERNANDINA BEACH

BLD DATE		LGL DATE	
XF DATE		LAND DATE	
INC DATE		AG DATE	

VALUATION SUMMARY

VALUATION BY	STANDARD
Tax Group: 8	Tax Dist:
BUILDING MARKET VALUE	730,629
TOTAL MARKET OB/XF VALUE	14,057
TOTAL LAND VALUE - MARKET	135,000
TOTAL MARKET VALUE	879,686
SOH/AGL Deduction	0
ASSESSED VALUE	879,686
TOTAL EXEMPTION VALUE	0
BASE TAXABLE VALUE	879,686
TOTAL JUST VALUE	879,686
NCON VALUE	0
INCOME VALUE	
PREVIOUS YEAR MKT VALUE	846,979

PERMIT NUM	DESCRIPTION	AMT	ISSUED
B1704965	SCRN ENCL	14,138	06/01/2017
B0413221	NEW CONSTR	215,444	08/01/2004

SALES DATA

OFF RECORD Number	DATE	TYPE INST	Q U	V I	RSN CD	SALE PRICE
2613/1548	1/13/2023	WD	Q	I	01	950,000
GRANTOR: FENN MARK & RAFFAELA						
GRANTEE: PROSPER REAL ESTATE						
1335/1296	7/25/2005	WD	Q	I		588,300
GRANTOR: THE PRESERVE AT SUMME						
GRANTEE: FENN MARK & RAFFAEL						

BUILDING NOTES

BUILDING DIMENSIONS

BAS=[YR=2005] W2 DCK=[YR=2005] N6 W25 S6 E25$ W38 S68 FGR=[YR=2005] S22 E21 N5 FOP=[YR=2005] E6 BAS=[YR=2005] S2 E3 S1 E7 N1 E3 N23 W13 S21$ N21 E1 N27 E12 N15 W10 S5 W5 S4 W7 S5 E3 S49$ N17 W21$ E21 N32 W3 N5 E7 N4 E5 N5 E10 UOP=[YR=2005] E5 N10 W5 S10$ N22$ PTR=N20 FUS=[YR=2005] N33 E25 S27 FSP=[YR=2005] E5 S8 W13 N4 E8 N4$ S4 W8 S4 W1 N2 W16$ S20$.

EXTRA FEATURES

LN	OB/XF CODE	DESCRIPTION	BLD	CAP	L	W	UNITS	UT	Adj R	ADJ UNIT PRICE	ORIG COND	YEAR ON	YEAR ACTUAL	Q	% COND	OB/XF MKT VALUE	NOTES
1	0500	FP-PRE FAB	0	0	0	0	1.00	UT	3,500.00	3,500.00	100	2005	2005	3	88	3,080	
2	0811	CONCRETE B	0	0	0	0	815.00	SF	5.20	5.20	100	2005	2005	3	84	3,560	
3	0810	CONCRETE A	0	0	17	3	51.00	SF	6.50	6.50	100	2005	2005	3	84	278	
4	1126	CB/STC 8"	0	0	0	0	336.00	SF	8.00	8.00	100	2005	2005	3	84	2,258	
5	0462	ST/AL FNC	0	0	0	0	111.00	SF	10.00	10.00	100	2005	2005	3	36	400	
6	0911	SCRN RM A	0	0	0	0	346.00	SF	17.50	17.50	100	2017	2017	3	74	4,481	

LAND DESCRIPTION

TOTAL OB/XF 14,057

LN	USE CODE	CLS	LAND USE DESCRIPTION	CAP	RD	LOC ZONE	FRONT	DEPTH	TOT LND UTS	UNIT TYPE	DT	DPTH FACT	% COND	TOT ADJ	UNIT PRICE	ADJ UNIT PRICE	LAND VALUE	OTHER ADJUSTMENTS AND NOTES	YEAR	DENSITY	DECL	FRZ	YR	CONSRV
1	000100	C	RES	0		PUD	0.00	0.00	1.00	LT		1.00	1.00	1.00	135,000.00	135,000.00	135,000							

REVIEW DATE 05/12/2019 BY KBA Total Acres: 0.00 Total Land Value: 135,000 Market: 0 Agricultural: 0 Common: 135,000 PRINTED 07/30/2025 BY SYS