LOT 1
PRESERVE @ SUMMER BEACH #1A
PB 6/399

ATKINSON MARY K REV LVNG TRUST/ATKINSON MARY K TRU
95129 WILLET WAY
FERNANDINA BEACH, FL 32034

**2025**

**00-SB-30-1671-0001-0000**

## NASSAU COUNTY PROPERTY



## BUILDING CHARACTERISTICS

| ELEMENT | CD | CONSTRUCTION |
|---|---|---|
| Exterior Wall | 16 | WD FR STUC 70 |
| Exterior Wall | 15 | CONC BLOCK 30 |
| Roof Structur | 08 | IRREGULAR 100 |
| Roof Cover | 07 | CONC TILE 100 |
| Interior Wall | 05 | DRYWALL 100 |
| Interior Floo | 11 | CLAY TILE 70 |
| Interior Floo | 14 | CARPET 30 |
| Air Condition | 03 | CENTRAL 100 |
| Heating Type | 04 | AIR DUCTED 100 |
| Bedrooms | | 4 100 |
| Bathrooms | | 4 100 |
| Frame | 02 | WOOD FRAME 100 |
| Stories | 2. | 2. 100 |
| Units | | 0 100 |
| Quality | 04 | Quality Level 04 |
| DOR CODE | 0100 | SINGLE FAMILY |
| MAP NUM | | MKT AREA 03 |
| NEIGHBORHOOD/LOC | 3021.00 | |

| AREA TYPE | TOTAL GROSS AREA | PCT OF BASE | YEAR | TOT ADJ AREA | SUBAREA MARKET VALUE |
|---|---|---|---|---|---|
| BAS | 2,343 | 100 | 2006 | 2,343 | 499,515 |
| FGR | 441 | 55 | 2006 | 243 | 51,806 |
| FOP | 42 | 30 | 2006 | 13 | 2,772 |
| FOP | 361 | 30 | 2006 | 108 | 23,025 |
| FUS | 489 | 100 | 2006 | 489 | 104,252 |
| UOP | 50 | 20 | 2006 | 10 | 2,132 |
| TOTALS | 3,726 | | | 3,206 | 683,503 |

## MARKET ADJUSTMENTS

| TYPE | MDL | EFF. AREA | TOT ADJ PTS | EFF. BASE RATE | REPL. COST NEW | AYB | EYB | ECON | FNCT | | NORM | % COND |
|---|---|---|---|---|---|---|---|---|---|---|---|---|
| 0500 | 11 | 3,206 | 148.2782 | 234.28 | 751,102 | 2006 | 2006 | 0 | 0 | 0 | 9.00 | 91.00 |

1 SFR CUST – 100% - 2007 Heated Area: 2832 HX Base Yr 2007

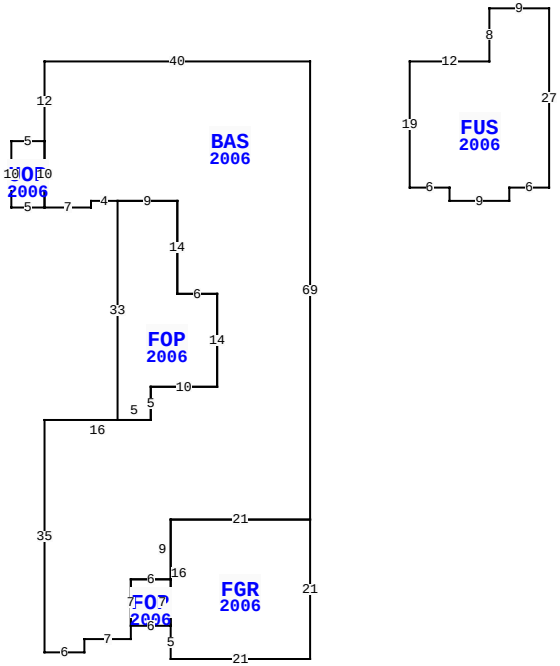


95129 WILLET WAY, FERNANDINA BEACH

| | | | |
|---|---|---|---|
| BLD DATE | | LGL DATE | |
| XF DATE | | LAND DATE | |
| INC DATE | | AG DATE | |

## VALUATION SUMMARY

| | | |
|---|---|---|
| VALUATION BY | | STANDARD |
| Tax Group: 8 | Tax Dist: | |
| BUILDING MARKET VALUE | | 683,503 |
| TOTAL MARKET OB/XF VALUE | | 11,818 |
| TOTAL LAND VALUE - MARKET | | 135,000 |
| TOTAL MARKET VALUE | | 830,321 |
| SOH/AGL Deduction | | 385,004 |
| ASSESSED VALUE | | 445,317 |
| TOTAL EXEMPTION VALUE | HX HB WX | 55,722 |
| BASE TAXABLE VALUE | | 389,595 |
| TOTAL JUST VALUE | | 830,321 |
| NCON VALUE | | 0 |
| INCOME VALUE | | |
| PREVIOUS YEAR MKT VALUE | | 799,517 |

| PERMIT NUM | DESCRIPTION | AMT | ISSUED |
|---|---|---|---|
| M10382 | MECH OTHER | 0 | 09/01/2005 |
| R08167 | REPAIR/RRF | 10,000 | 08/01/2005 |
| P09277 | OTHER | 0 | 04/01/2005 |
| E0413988 | ELEC OTHER | 2,000 | 12/01/2004 |
| C0414073 | CO ISSUED | 204,850 | 11/01/2004 |
| B0414073 | NEW CONSTR | 204,850 | 11/01/2004 |

## SALES DATA

| OFF RECORD Number | DATE | TYPE INST | Q / U | V / I | RSN CD | SALE PRICE |
|---|---|---|---|---|---|---|
| 2607/0207 | 12/08/2022 | QC | U | I | 11 | 100 |
| GRANTOR: ATKINSON MARY E A/K/A | | | | | | |
| GRANTEE: ATKINSON MARY K REV | | | | | | |
| 1470/0411 | 1/08/2007 | WD | U | I | 21 | 500,000 |
| GRANTOR: THE PRESERVE AT SUMME | | | | | | |
| GRANTEE: ATKINSON THOMAS D & | | | | | | |

## BUILDING NOTES

## BUILDING DIMENSIONS

BAS=[YR=2006] W40 S12 UOP=[YR=2006] W5 S10 E5 N10$ S10 E7 N1 E4 FOP=[YR=2006] S33 E5 N5 E10 N14 W6 N14 W9$ E9 S14 E6 S14 W10 S5 W16 S35 E6 N2 E7 N2 FOP=[YR=2006] E6 FGR=[YR=2006] S5 E21 N21 W21 S16$ N7 W6 S7$ N7 E6 N9 E21 N69$ PTR= E15 FUS=[YR=2006] E12 N8 E9 S27 W6 S2 W9 N2 W6 N19$ W15$.

## EXTRA FEATURES

| LN | OB/XF CODE | DESCRIPTION | BLD | CAP | L | W | UNITS | UT | Adj R | ADJ UNIT PRICE | ORIG COND | YEAR ON | YEAR ACTUAL | Q | % COND | OB/XF MKT VALUE | NOTES |
|---|---|---|---|---|---|---|---|---|---|---|---|---|---|---|---|---|---|
| 1 | 0500 | FP-PRE FAB | 0 | 100 | 0 | 0 | 1.00 | UT | 3,500.00 | 3,500.00 | 100 | 2006 | 2006 | 3 | 89 | 3,115 | |
| 2 | 0810 | CONCRETE A | 0 | 100 | 0 | 0 | 436.00 | SF | 6.50 | 6.50 | 100 | 2006 | 2006 | 3 | 86 | 2,437 | |
| 3 | 0855 | CONC PAVER | 0 | 100 | 17 | 3 | 51.00 | SF | 10.00 | 10.00 | 100 | 2006 | 2006 | 3 | 86 | 439 | |
| 4 | 0855 | CONC PAVER | 0 | 100 | 0 | 0 | 373.00 | SF | 10.00 | 10.00 | 100 | 2006 | 2006 | 3 | 86 | 3,208 | |
| 5 | 1126 | CB/STC 8" | 0 | 100 | 0 | 0 | 259.00 | SF | 8.00 | 8.00 | 100 | 2006 | 2006 | 3 | 86 | 1,782 | |
| 6 | 0910 | SCRN RM L | 0 | 100 | 0 | 0 | 465.00 | SF | 7.50 | 7.50 | 100 | 2006 | 2006 | 3 | 24 | 837 | |

## LAND DESCRIPTION

TOTAL OB/XF 11,818

| LN | USE CODE | CLS | LAND USE DESCRIPTION | CAP | RD | LOC ZONE | FRONT | DEPTH | TOT LND UTS | UNIT TYPE | DT | DPTH FACT | % COND | TOT ADJ | UNIT PRICE | ADJ UNIT PRICE | LAND VALUE | OTHER ADJUSTMENTS AND NOTES | YEAR | DENSITY | DECL | FRZ | YR | CONSRV |
|---|---|---|---|---|---|---|---|---|---|---|---|---|---|---|---|---|---|---|---|---|---|---|---|---|
| 1 | 000100 | C | RES | 100 | | PUD | 0.00 | 0.00 | 1.00 | LT | | 1.00 | 1.00 | 1.00 | 135,000.00 | 135,000.00 | 135,000 | | | | | | | |

REVIEW DATE 05/12/2019 BY KBA Total Acres: 0.00 Total Land Value: 135,000 Market: 0 Agricultural: 0 Common: 135,000 PRINTED 07/30/2025 BY SYS