LOT 132
GOLFSIDE AT SUMMER BEACH #1
PB 5/114-118

**MARGONIS ANDREW F JR & KIMBERLY M**
4704 YACHTSMANS DRIVE
FERNANDINA BEACH, FL 32034

**2025**

**00-SB-30-065A-0132-0000**

## NASSAU COUNTY PROPERTY



## BUILDING CHARACTERISTICS

| ELEMENT | CD | CONSTRUCTION |
|---|---|---|
| Exterior Wall | 16 | WD FR STUC 100 |
| Roof Structur | 03 | GABLE/HIP 100 |
| Roof Cover | 03 | COMP SHNGL 100 |
| Interior Wall | 05 | DRYWALL 100 |
| Interior Floo | 14 | CARPET 70 |
| Interior Floo | 12 | HARDWOOD 30 |
| Air Condition | 03 | CENTRAL 100 |
| Heating Type | 04 | AIR DUCTED 100 |
| Bedrooms | | 4 100 |
| Bathrooms | | 2.5 100 |
| Frame | 02 | WOOD FRAME 100 |
| Stories | 1. | 1. 100 |
| Units | | 0 100 |
| Occupancy | 00 | NONE 100 |
| Quality | 04 | Quality Level 04 |
| DOR CODE | 0100 | SINGLE FAMILY |
| MAP NUM | | MKT AREA 03 |
| NEIGHBORHOOD/LOC | 3019.00 | |

| AREA TYPE | TOTAL GROSS AREA | PCT OF BASE | YEAR | TOT ADJ AREA | SUBAREA MARKET VALUE |
|---|---|---|---|---|---|
| BAS | 2,578 | 100 | 1999 | 2,578 | 381,673 |
| FGR | 556 | 55 | 1999 | 306 | 45,303 |
| FOP | 56 | 30 | 1999 | 17 | 2,517 |
| FOP | 102 | 30 | 1999 | 31 | 4,589 |
| UOP | 55 | 20 | 1999 | 11 | 1,628 |
| TOTALS | 3,347 | | | 2,943 | 435,712 |

## MARKET ADJUSTMENTS

| TYPE | MDL | EFF. AREA | TOT ADJ PTS | EFF. BASE RATE | REPL. COST NEW | AYB | EYB | ECON | FNCT | | NORM | % COND |
|---|---|---|---|---|---|---|---|---|---|---|---|---|
| 0500 | 01 | 2,943 | 107.0895 | 169.20 | 497,956 | 1999 | 1999 | 0 | 0 | 0 | 12.50 | 87.50 |

1 SFR CUST – 100% - 2021 Heated Area: 2578 HX Base Yr 2021

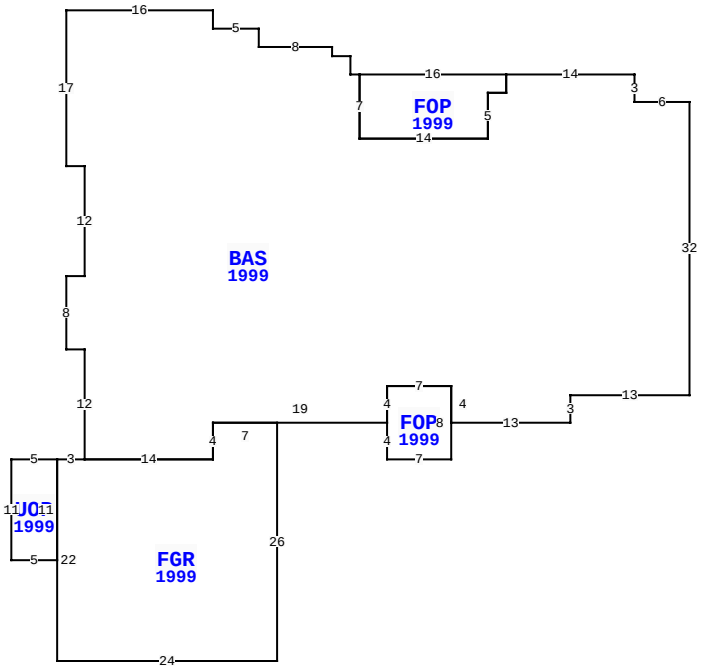


4704 YACHTSMANS DR, FERNANDINA BEACH

| | | | |
|---|---|---|---|
| BLD DATE | | LGL DATE | |
| XF DATE | | LAND DATE | |
| INC DATE | | AG DATE | |

## VALUATION SUMMARY

| | | |
|---|---|---|
| VALUATION BY | | STANDARD |
| Tax Group: 8 | Tax Dist: | |
| BUILDING MARKET VALUE | | 435,712 |
| TOTAL MARKET OB/XF VALUE | | 71,046 |
| TOTAL LAND VALUE - MARKET | | 350,000 |
| TOTAL MARKET VALUE | | 856,758 |
| SOH/AGL Deduction | | 194,795 |
| ASSESSED VALUE | | 661,963 |
| TOTAL EXEMPTION VALUE | HX HB | 50,722 |
| BASE TAXABLE VALUE | | 611,241 |
| TOTAL JUST VALUE | | 856,758 |
| NCON VALUE | | 0 |
| INCOME VALUE | | |
| PREVIOUS YEAR MKT VALUE | | 837,122 |

| PERMIT NUM | DESCRIPTION | AMT | ISSUED |
|---|---|---|---|
| 22004884 | ADDITION | 13,500 | 03/30/2022 |
| 22001974 | SWIM POOL | 66,450 | 02/04/2022 |
| B0311833 | ADDITION | 4,455 | 10/01/2003 |
| B9905714 | NEW CONSTR | 120,432 | 01/01/1999 |

## SALES DATA

| OFF RECORD Number | DATE | TYPE INST | Q / U | V / I | RSN CD | SALE PRICE |
|---|---|---|---|---|---|---|
| 2411/0854 | 11/20/2020 | WD | Q | I | 02 | 658,000 |
| GRANTOR: LETHERT CHRISTOPHER M | | | | | | |
| GRANTEE: MARGONIS ANDREW F J | | | | | | |
| 2051/1946 | 6/09/2016 | WD | Q | I | 02 | 425,000 |
| GRANTOR: NEWMAN MARCIA STREUSS | | | | | | |
| GRANTEE: LETHERT CHRISTOPHER | | | | | | |

## BUILDING NOTES

## BUILDING DIMENSIONS

BAS=[YR=1999] W6 N3 W14 FOP=[YR=1999] W16 S7 E14 N5E2N2$ S2W2 S5 W14 N7 W1N2W2N1 W8 N2 W5 N2 W16 S17 E2 S12W2S8 E2 S12 FGR=[YR=1999] W3 UOP=[YR=1999] W5 S11 E5 N11 $ S22 E24 N26 W7S4 W14 $ E14 N4 E19 FOP=[YR=1999] S4 E7 N8 W7 S4 $ N4 E7 S4 E13 N3 E13 N32 $ .

## EXTRA FEATURES

| LN | OB/XF CODE | DESCRIPTION | BLD | CAP | L | W | UNITS | UT | Adj R | ADJ UNIT PRICE | ORIG COND | YEAR ON | YEAR ACTUAL | Q | % COND | OB/XF MKT VALUE | NOTES |
|---|---|---|---|---|---|---|---|---|---|---|---|---|---|---|---|---|---|
| 1 | 0500 | FP-PRE FAB | 0 | 100 | 0 | 0 | 1.00 | UT | 3,500.00 | 3,500.00 | 100 | 1999 | 1999 | 3 | 81 | 2,835 | |
| 2 | 0825 | BRICK | 0 | 100 | 0 | 0 | 1,144.00 | SF | 12.50 | 12.50 | 100 | 2003 | 2003 | 3 | 95 | 13,585 | |
| 3 | 0825 | BRICK | 0 | 100 | 0 | 0 | 27.00 | SF | 12.50 | 12.50 | 100 | 2003 | 2003 | 3 | 95 | 321 | |
| 4 | 0825 | BRICK | 0 | 100 | 0 | 0 | 56.00 | SF | 12.50 | 12.50 | 100 | 2003 | 2003 | 3 | 95 | 665 | |
| 5 | 0861 | POOL GUNIT | 0 | 100 | 0 | 0 | 320.00 | SF | 85.00 | 85.00 | 100 | 2024 | 2024 | 3 | 100 | 27,200 | |
| 6 | 0855 | CONC PAVER | 0 | 100 | 0 | 0 | 668.00 | SF | 10.00 | 10.00 | 100 | 2024 | 2024 | 3 | 100 | 6,680 | |
| 7 | 0912 | SCRN RM G | 0 | 100 | 0 | 0 | 988.00 | SF | 20.00 | 20.00 | 100 | 2024 | 2024 | 3 | 100 | 19,760 | |

## LAND DESCRIPTION

TOTAL OB/XF 71,046

| LN | USE CODE | CLS | LAND USE DESCRIPTION | CAP | RD | LOC ZONE | FRONT | DEPTH | TOT LND UTS | UNIT TYPE | DT | DPTH FACT | % COND | TOT ADJ | UNIT PRICE | ADJ UNIT PRICE | LAND VALUE | OTHER ADJUSTMENTS AND NOTES | YEAR | DENSITY | DECL | FRZ | YR | CONSRV |
|---|---|---|---|---|---|---|---|---|---|---|---|---|---|---|---|---|---|---|---|---|---|---|---|---|
| 1 | 000100 | C | RES | 100 | | PUD | 0.00 | 0.00 | 1.00 | LT | | 1.00 | 1.00 | 1.00 | 350,000.00 | 350,000.00 | 350,000 | | | | | | | |

REVIEW DATE 03/15/2023 BY DJ Total Acres: 0.00 Total Land Value: 350,000 Market: 0 Agricultural: 0 Common: 350,000 PRINTED 07/30/2025 BY SYS