LOT 131
IN OR 1377/569
GOLFSIDE AT SUMMER BEACH #1

ROBERTSON ALAN A & CYNTHIA A
4708 YATCHMANS DRIVE
FERNANDINA BEACH, FL 32034

2025

00-SB-30-065A-0131-0000

NASSAU COUNTY PROPERTY

BUILDING CHARACTERISTICS

ELEMENT	CD	CONSTRUCTION
Exterior Wall	16	WD FR STUC 100
Roof Structur	08	IRREGULAR 100
Roof Cover	03	COMP SHNGL 100
Interior Wall	05	DRYWALL 100
Interior Floo	09	PINE WOOD 50
Interior Floo	14	CARPET 50
Air Condition	03	CENTRAL 100
Heating Type	04	AIR DUCTED 100
Bedrooms		3 100
Bathrooms		3 100
Frame	02	WOOD FRAME 100
Stories	2.	2. 100
Units		0 100
Occupancy	00	NONE 100
Quality	04	Quality Level 04
DOR CODE	0100	SINGLE FAMILY
MAP NUM		MKT AREA 03
NEIGHBORHOOD/LOC	3019.00	

AREA TYPE	TOTAL GROSS AREA	PCT OF BASE	YEAR	TOT ADJ AREA	SUBAREA MARKET VALUE
BAS	204	100	2003	204	29,034
BAS	2,507	100	2003	2,507	356,803
FGR	835	55	2003	459	65,326
FOP	247	30	2003	74	10,531
FUS	657	100	2003	657	93,506
PTO	68	5	2003	3	427
UOP	351	20	2003	70	9,962
TOTALS	4,869			3,974	565,591

MARKET ADJUSTMENTS

TYPE	MDL	EFF. AREA	TOT ADJ PTS	EFF. BASE RATE	REPL. COST NEW	AYB	EYB	ECON	FNCT		NORM	% COND
0500	01	3,974	100.6425	159.02	631,945	2003	2003	0	0	0	10.50	89.50

1 SFR CUST – 100% - 2007 Heated Area: 3368 HX Base Yr 2007

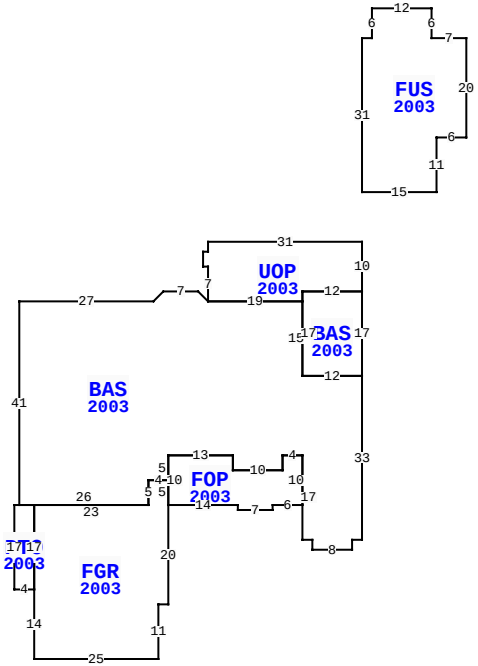

4708 YACHTSMANS DR, FERNANDINA BEACH

BLD DATE		LGL DATE	
XF DATE		LAND DATE	
INC DATE		AG DATE	

NASSAU COUNTY PROPERTY — VALUATION SUMMARY

VALUATION BY		STANDARD
Tax Group: 8	Tax Dist:	
BUILDING MARKET VALUE		565,591
TOTAL MARKET OB/XF VALUE		25,313
TOTAL LAND VALUE - MARKET		350,000
TOTAL MARKET VALUE		940,904
SOH/AGL Deduction		421,335
ASSESSED VALUE		519,569
TOTAL EXEMPTION VALUE	HX HB	50,722
BASE TAXABLE VALUE		468,847
TOTAL JUST VALUE		940,904
NCON VALUE		0
INCOME VALUE		
PREVIOUS YEAR MKT VALUE		915,460

PERMIT NUM	DESCRIPTION	AMT	ISSUED
G01518	GAS	1,300	04/01/2010
B19162	CARPORT	13,290	12/01/2006
B0311343	NEW CONSTR	255,044	06/01/2003
R035208	REPAIR/RRF	3,500	06/01/2003

SALES DATA

OFF RECORD Number	DATE	TYPE INST	Q U	V I	RSN CD	SALE PRICE
1377/0569	12/29/2005	WD	Q	I		849,000
GRANTOR: LAUERMAN JAMES R & BA						
GRANTEE: ROBERTSON ALAN A &						
0922/0992	3/03/2000	WD	Q	V		92,000
GRANTOR: TARPLEY JULIE						
GRANTEE: LAUERMAN JAMES R &						

BUILDING NOTES

BUILDING DIMENSIONS

UOP=[YR=2003] W31 S2 W1 S3 E1 S7 BAS=[YR=2003] L2 U2 W7 D2 L2 W27 S41 PTO=[YR=2003] W1 S17 E4 FGR=[YR=2003] S14 E25 N11 E2 N20 FOP=[YR=2003] E14 S1 E7 N1 E6 N10 W4 S3 W10 N3 W13 S10$ N5 W4 S5 W23 S17$ N17 W3$E26 N5 E4 N5 E13 S3 E10 N3 E4 S17 E2 S2 E8 N2 E2 N33 BAS=[YR=2003] N17 W12 S17 E12$ W12 N15 W19$ E19 N2 E12 N10$ PTR= N10 FUS=[YR=2003] N31 E2 N6 E12 S6 E7 S20 W6 S11 W15$ S10$.

EXTRA FEATURES

LN	OB/XF CODE	DESCRIPTION	BLD	CAP	L	W	UNITS	UT	Adj R	ADJ UNIT PRICE	ORIG COND	YEAR ON	YEAR ACTUAL	Q	% COND	OB/XF MKT VALUE	NOTES
1	0500	FP-PRE FAB	0	100	0	0	1.00	UT	3,500.00	3,500.00	100	2003	2003	3	86	3,010	
2	0858	SCULP CONC	0	100	0	0	1,546.00	SF	13.00	13.00	100	2003	2003	3	95	19,093	
3	1126	CB/STC 8"	0	100	0	0	80.00	SF	8.00	8.00	100	2003	2003	3	82	525	
4	0855	CONC PAVER	0	100	0	0	182.00	SF	10.00	10.00	100	2007	2007	3	87	1,583	
5	0910	SCRN RM L	0	100	0	0	272.00	SF	15.00	15.00	100	2007	2007	3	27	1,102	

LAND DESCRIPTION

TOTAL OB/XF 25,313

LN	USE CODE	CLS	LAND USE DESCRIPTION	CAP	RD	LOC ZONE	FRONT	DEPTH	TOT LND UTS	UNIT TYPE	DT	DPTH FACT	% COND	TOT ADJ	UNIT PRICE	ADJ UNIT PRICE	LAND VALUE	OTHER ADJUSTMENTS AND NOTES	YEAR	DENSITY	DECL	FRZ	YR	CONSRV
1	000100	C	RES	100		PUD	0.00	0.00	1.00	LT		1.00	1.00	1.00	350,000.00	350,000.00	350,000							

REVIEW DATE 05/12/2019 BY KBA Total Acres: 0.00 Total Land Value: 350,000 Market: 0 Agricultural: 0 Common: 350,000 PRINTED 07/30/2025 BY SYS