LOT 128
IN OR 1392/1841
GOLFSIDE AT SUMMER BEACH #1

TORRES FAMILY REVOC TRUST
C/O DIANE TORRES, 1652 YACHTSMANS COURT
FERNANDINA BEACH, FL 32034

2025

00-SB-30-065A-0128-0000

BUILDING CHARACTERISTICS

ELEMENT	CD	CONSTRUCTION
Exterior Wall	10	ABOVE AVG 100
Roof Structur	08	IRREGULAR 100
Roof Cover	03	COMP SHNGL 100
Interior Wall	05	DRYWALL 100
Interior Floo	11	CLAY TILE 100
Air Condition	03	CENTRAL 100
Heating Type	04	AIR DUCTED 100
Bedrooms		4 100
Bathrooms		3.5 100
Frame	02	WOOD FRAME 100
Stories	1.	1. 100
Units		0 100
Occupancy	00	NONE 100
Quality	04	Quality Level 04
DOR CODE	0100	SINGLE FAMILY
MAP NUM		MKT AREA 03
NEIGHBORHOOD/LOC	3019.00	

AREA TYPE	TOTAL GROSS AREA	PCT OF BASE	YEAR	TOT ADJ AREA	SUBAREA MARKET VALUE
BAS	2,211	100	1998	2,211	354,421
BAS	132	100	2013	132	21,160
BAS	528	100	2013	528	84,638
BAS	795	100	2013	795	127,437
FGR	427	55	1998	235	37,670
FGR	160	55	2013	88	14,107
FOP	45	30	1998	14	2,245
FSP	528	40	2013	211	33,823
PTO	72	5	2013	4	641
PTO	188	5	2013	9	1,443
TOTALS	5,086			4,227	677,584

MARKET ADJUSTMENTS

TYPE	MDL	EFF. AREA	TOT ADJ PTS	EFF. BASE RATE	REPL. COST NEW	AYB	EYB	ECON	FNCT		NORM	% COND
0500	01	4,227	112.7280	178.11	752,871	1998	2003	0	0	0	10.00	90.00

1 SFR CUST – 100% - 2005 Heated Area: 3666 HX Base Yr 2005

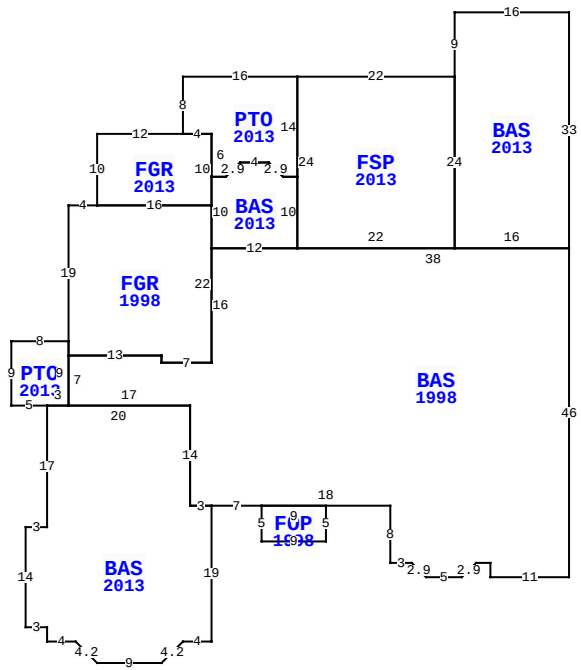

1652 YACHTSMANS CT, FERNANDINA BEACH

BLD DATE		LGL DATE	
XF DATE		LAND DATE	
INC DATE		AG DATE	

NASSAU COUNTY PROPERTY

PAGE 1 of 1 8

VALUATION SUMMARY

VALUATION BY		STANDARD
Tax Group: 8	Tax Dist:	
BUILDING MARKET VALUE		677,584
TOTAL MARKET OB/XF VALUE		16,727
TOTAL LAND VALUE - MARKET		350,000
TOTAL MARKET VALUE		1,044,311
SOH/AGL Deduction		452,168
ASSESSED VALUE		592,143
TOTAL EXEMPTION VALUE	HX HB WX	55,722
BASE TAXABLE VALUE		536,421
TOTAL JUST VALUE		1,044,311
NCON VALUE		0
INCOME VALUE		
PREVIOUS YEAR MKT VALUE		1,013,701

PERMIT NUM	DESCRIPTION	AMT	ISSUED
M16462	H/AC	0	08/01/2011
B24567	ADDITION	199,323	04/01/2011
B0311333	REMODEL	3,809	06/01/2003
B9704530	NEW CONSTR	150,000	12/01/1997

SALES DATA

OFF RECORD Number	DATE	TYPE INST	Q U	V I	RSN CD	SALE PRICE
1392/1841	3/02/2006	WD	Q	I	01	100
GRANTOR: TORRES ROBERT B & DIA						
GRANTEE: TORRES ROBERT B TRU						
1183/1177	10/24/2003	WD	Q	I		438,000
GRANTOR: JOHNSON JULIE						
GRANTEE: TORRES ROBERT B & D						

BUILDING NOTES

BUILDING DIMENSIONS

BAS=[YR=2013] W16 S9 FSP=[YR=2013] W22 PTO=[YR=2013] W16 S8 FGR=[YR=2013] W12 S10 FGR=[YR=1998] W4 S19 PTO=[YR=2013] W8 S9 E5 BAS=[YR=2013] S17 W3 S14 E3 S2 E4 D3 R3 E9 U3 R3 E4 N19 BAS=[YR=1998] E7 FOP=[YR=1998] S5 E9 N5 W9 $ E18 S8 E3 D2 R2 E5 U2 R2 E2 S2 E11 N46 W38 BAS=[YR=2013] N10 W2 U2 L2 W4 D2 L2 W2 S10 E12 $ W12 S16 W7 N1 W13 S7 E17 S14 E3$ W3 N14 W20$ E3 N9$ S2 E13 S1 E7 N22 W16$ E16 N10 W4$ E4 S6 E2 U2 R2 E4 D2 R2 E2 N14$ S24 E22 N24$ S24 E16 N33$.

EXTRA FEATURES

LN	OB/XF CODE	DESCRIPTION	BLD	CAP	L	W	UNITS	UT	Adj R	ADJ UNIT PRICE	ORIG COND	YEAR ON	YEAR ACTUAL	Q	% COND	OB/XF MKT VALUE	NOTES
1	0500	FP-PRE FAB	0	100	0	0	1.00	UT	3,500.00	3,500.00	100	1998	1998	3	80	2,800	
2	0855	CONC PAVER	0	100	0	0	1,033.00	SF	7.00	7.00	100	2012	2012	3	92	6,653	
3	0855	CONC PAVER	0	100	0	0	182.00	SF	7.00	7.00	100	2012	2012	3	92	1,172	
4	0825	BRICK	0	100	0	0	405.00	SF	12.50	12.50	100	2012	2012	3	98	4,961	
5	1126	CB/STC 8"	0	100	31	0	155.00	SF	8.00	8.00	100	2012	2012	3	92	1,141	

LAND DESCRIPTION

TOTAL OB/XF 16,727

LN	USE CODE	CLS	LAND USE DESCRIPTION	CAP	RD	LOC ZONE	FRONT	DEPTH	TOT LND UTS	UNIT TYPE	DT	DPTH FACT	% COND	TOT ADJ	UNIT PRICE	ADJ UNIT PRICE	LAND VALUE	OTHER ADJUSTMENTS AND NOTES	YEAR	DENSITY	DECL	FRZ	YR	CONSRV
1	000100	C	RES	100		PUD	0.00	0.00	1.00	LT		1.00	1.00	1.00	350,000.00	350,000.00	350,000							

REVIEW DATE 05/12/2019 BY KBA Total Acres: 0.00 Total Land Value: 350,000 Market: 0 Agricultural: 0 Common: 350,000 PRINTED 07/30/2025 BY SYS