LOT 118
IN OR 808/170
GOLFSIDE AT SUMMER BEACH #1

BOSWELL ANNA T & RALPH R
1667 REGATTA DRIVE
FERNANDINA BEACH, FL 32034

2025

00-SB-30-065A-0118-0000

BUILDING CHARACTERISTICS

ELEMENT	CD	CONSTRUCTION
Exterior Wall	16	WD FR STUC 100
Roof Structur	03	GABLE/HIP 100
Roof Cover	03	COMP SHNGL 100
Interior Wall	05	DRYWALL 100
Interior Floo	12	HARDWOOD 50
Interior Floo	14	CARPET 50
Air Condition	03	CENTRAL 100
Heating Type	04	AIR DUCTED 100
Bedrooms		3 100
Bathrooms		3.5 100
Frame	02	WOOD FRAME 100
Stories	2.	2. 100
Units		0 100
Occupancy	00	NONE 100
Quality	04	Quality Level 04

DOR CODE 0100 SINGLE FAMILY
MAP NUM | MKT AREA 03
NEIGHBORHOOD/LOC 3019.00

AREA TYPE	TOTAL GROSS AREA	PCT OF BASE	YEAR	TOT ADJ AREA	SUBAREA MARKET VALUE
BAS	1,727	100	1999	1,727	249,321
FGR	572	55	1999	315	45,476
FOP	7	30	1999	2	289
FOP	80	30	1999	24	3,465
FOP	97	30	1999	29	4,187
FUS	1,576	100	1999	1,576	227,521
PTO	56	5	1999	3	433
UOP	12	20	1999	2	289
UOP	338	20	1999	68	9,817
TOTALS	4,465			3,746	540,796

MARKET ADJUSTMENTS

TYPE	MDL	EFF. AREA	TOT ADJ PTS	EFF. BASE RATE	REPL. COST NEW	AYB	EYB	ECON	FNCT		NORM	% COND
0500	01	3,746	104.4225	164.99	618,053	1999	1999	0	0	0	12.50	87.50

1 SFR CUST – 100% - 2000 Heated Area: 3303 HX Base Yr 2000

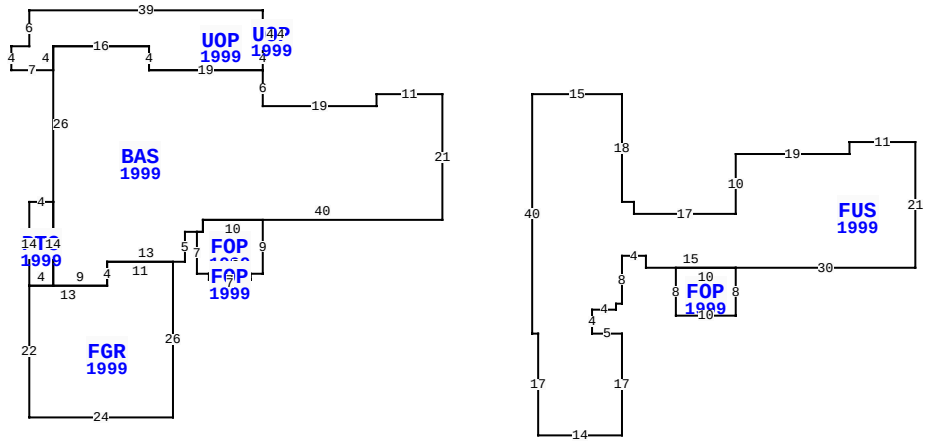

1667 REGATTA DR, FERNANDINA BEACH

BLD DATE		LGL DATE	
XF DATE		LAND DATE	
INC DATE		AG DATE	

NASSAU COUNTY PROPERTY

PAGE 1 of 1 8

VALUATION SUMMARY

VALUATION BY		STANDARD
Tax Group: 8	Tax Dist:	
BUILDING MARKET VALUE		540,796
TOTAL MARKET OB/XF VALUE		8,415
TOTAL LAND VALUE - MARKET		350,000
TOTAL MARKET VALUE		899,211
SOH/AGL Deduction		409,611
ASSESSED VALUE		489,600
TOTAL EXEMPTION VALUE	HX HB	50,722
BASE TAXABLE VALUE		438,878
TOTAL JUST VALUE		899,211
NCON VALUE		0
INCOME VALUE		
PREVIOUS YEAR MKT VALUE		874,961

PERMIT NUM	DESCRIPTION	AMT	ISSUED
B9905713	NEW CONSTR	159,595	01/01/1999

SALES DATA

OFF RECORD Number	DATE	TYPE INST	Q / U	V / I	RSN CD	SALE PRICE
0808/0170	9/30/1997	WD	Q	V		62,500
GRANTOR: HARPER JAMES C & MARJ						
GRANTEE: BOSWELL ANNA T & RA						
0535/0444	1/22/1988	WD	Q	V		42,000
GRANTOR: SUMMER BCH AMENITIES						
GRANTEE: HARPER JAMES C						

BUILDING NOTES

BUILDING DIMENSIONS

BAS=[YR=1999] W11 S2 W19 N6 UOP=[YR=1999] N4 UOP=[YR=1999] E3 N4 W3 S4 $ N6 W39 S6 W3 S4 E7 N4 E16 S4 E19 $ W19 N4 W16 S26 PTO=[YR=1999] W4 S14 FGR=[YR=1999] S22 E24 N26 W11 S4 W13 $ E4 N14 $ S14 E9 N4 E13 N5 E2 FOP=[YR=1999] S7 E2 FOP=[YR=1999] S1 E7 N1 W7 $ E9 N9 W10 S2 W1 $ E1 N2 E40 N21 $ PTR= E15 FUS=[YR=1999] E15 S18 E2 S2 E17 N10 E19 N2 E11 S21 W30 FOP=[YR=1999] S8 W10 N8 E10 $ W15 N2 W4 S8 W1 S1 W4 S4 E5 S17 W14 N17 W1 N40 $ W15 $.

EXTRA FEATURES

LN	OB/XF CODE	DESCRIPTION	BLD	CAP	L	W	UNITS	UT	Adj R	ADJ UNIT PRICE	ORIG COND	YEAR ON	YEAR ACTUAL	Q	% COND	OB/XF MKT VALUE	NOTES
1	0500	FP-PRE FAB	0	100	0	0	1.00	UT	3,500.00	3,500.00	100	1999	1999	3	81	2,835	
2	0810	CONCRETE A	0	100	0	0	1,015.00	SF	6.50	6.50	100	1999	1999	3	75	4,948	
3	0810	CONCRETE A	0	100	0	0	52.00	SF	6.50	6.50	100	1999	1999	3	75	254	
4	1126	CB/STC 8"	0	100	0	0	63.00	SF	8.00	8.00	100	1999	1999	3	75	378	

LAND DESCRIPTION

TOTAL OB/XF 8,415

LN	USE CODE	CLS	LAND USE DESCRIPTION	CAP	RD	LOC ZONE	FRONT	DEPTH	TOT LND UTS	UNIT TYPE	DT	DPTH FACT	% COND	TOT ADJ	UNIT PRICE	ADJ UNIT PRICE	LAND VALUE	OTHER ADJUSTMENTS AND NOTES	YEAR	DENSITY	DECL	FRZ	YR	CONSRV
1	000100	C	RES	100		PUD	0.00	0.00	1.00	LT		1.00	1.00	1.00	350,000.00	350,000.00	350,000							

REVIEW DATE 05/12/2019 BY KBA Total Acres: 0.00 Total Land Value: 350,000 Market: 0 Agricultural: 0 Common: 350,000 PRINTED 07/30/2025 BY SYS