LOT 90 & PT SEC 13-2N-28
IN OR 1257/206
GOLFSIDE AT SUMMER BEACH #1

ZBOYOVSKY LILLIAN LVG TRUST/ZBOYOVSKY LILLIAN TRUS
4720 GEONA DR
FERNANDINA BEACH, FL 32034

2025

00-SB-30-065A-0090-0000

NASSAU COUNTY PROPERTY

BUILDING CHARACTERISTICS

ELEMENT	CD	CONSTRUCTION
Exterior Wall	16	WD FR STUC 100
Roof Structur	03	GABLE/HIP 100
Roof Cover	03	COMP SHNGL 100
Interior Wall	05	DRYWALL 100
Interior Floo	14	CARPET 70
Interior Floo	12	HARDWOOD 30
Air Condition	03	CENTRAL 100
Heating Type	04	AIR DUCTED 100
Bedrooms		4 100
Bathrooms		2.5 100
Frame	02	WOOD FRAME 100
Stories	1.	1. 100
Units		0 100
Occupancy	00	NONE 100
Quality	04	Quality Level 04

DOR CODE 0100 SINGLE FAMILY
MAP NUM | MKT AREA 03
NEIGHBORHOOD/LOC 3019.00

AREA TYPE	TOTAL GROSS AREA	PCT OF BASE	YEAR	TOT ADJ AREA	SUBAREA MARKET VALUE
BAS	2,504	100	1993	2,504	346,243
BAS	326	100	2001	326	45,078
FGR	516	55	1993	284	39,270
FOP	35	30	1993	10	1,383
PTO	36	5	1993	2	276
UOP	55	20	2001	11	1,521
TOTALS	3,472			3,137	433,772

MARKET ADJUSTMENTS

TYPE	MDL	EFF. AREA	TOT ADJ PTS	EFF. BASE RATE	REPL. COST NEW	AYB	EYB	ECON	FNCT		NORM	% COND
0500	01	3,137	104.8110	165.60	519,487	1991	1991	0	0	0	16.50	83.50

1 SFR CUST – 100% - 1997 Heated Area: 2830 HX Base Yr 1997

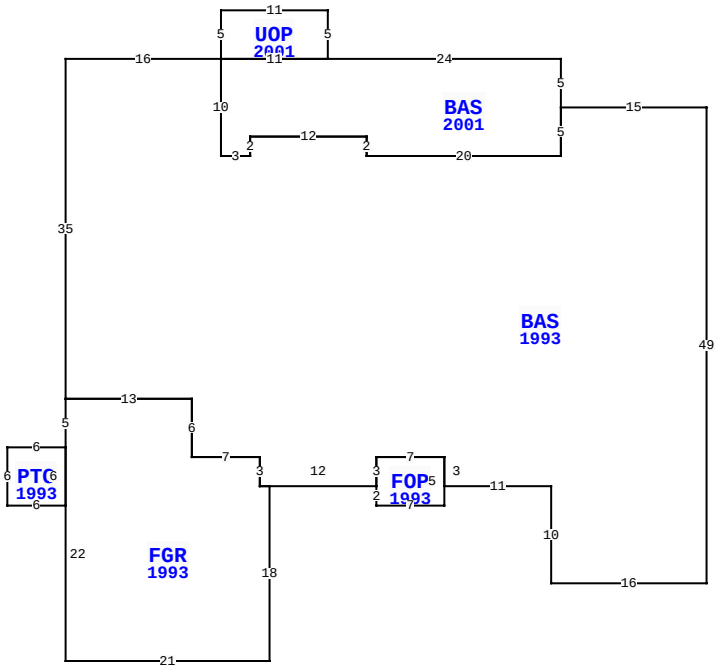

4720 GENOA DR, FERNANDINA BEACH

BLD DATE		LGL DATE	
XF DATE		LAND DATE	03/26/2024 MLU
INC DATE		AG DATE	

VALUATION SUMMARY

VALUATION BY		STANDARD
Tax Group: 8	Tax Dist:	
BUILDING MARKET VALUE		433,772
TOTAL MARKET OB/XF VALUE		24,222
TOTAL LAND VALUE - MARKET		500,000
TOTAL MARKET VALUE		957,994
SOH/AGL Deduction		537,598
ASSESSED VALUE		420,396
TOTAL EXEMPTION VALUE	HX HB WX	55,722
BASE TAXABLE VALUE		364,674
TOTAL JUST VALUE		957,994
NCON VALUE		0
INCOME VALUE		
PREVIOUS YEAR MKT VALUE		939,201

PERMIT NUM	DESCRIPTION	AMT	ISSUED
17011043	SCRNROOM	20,618	12/12/2017
R1213155	ROOF	9,000	10/01/2012
B018563	XFOB	8,875	07/01/2001
7024	NEW CONSTR	104,025	02/27/1991

SALES DATA

OFF RECORD Number	DATE	TYPE INST	Q U	V I	RSN CD	SALE PRICE
1257/0206	9/03/2004	WD	Q	I	01	100
GRANTOR: ZBOYOVSKY LILLIAN P &						
GRANTEE: ZBOYOVSKY LILLIAN P						
1257/0203	9/03/2004	WD	Q	I	01	100
GRANTOR: ZBOYOVSKY JAMES F & L						
GRANTEE: ZBOYOVSKY LILLIAN P						

BUILDING NOTES

BUILDING DIMENSIONS

BAS=[YR=1993] W15 BAS=[YR=2001] N5 W24 UOP=[YR=2001] N5 W11 S5 E11 $ W11 S10 E3 N2 E12 S2 E20 N5 $ S5 W20 N2 W12 S2W3 N10 W16 S35 FGR=[YR=1993] S5 PTO=[YR=1993] W6 S6 E6 N6 $ S22 E21 N18 W1 N3 W7 N6 W13 $ E13 S6 E7 S3 E12 FOP=[YR=1993] S2 E7 N5 W7 S3 $ N3 E7 S3 E11 S10 E16 N49 $.

EXTRA FEATURES

LN	OB/XF CODE	DESCRIPTION	BLD	CAP	L	W	UNITS	UT	Adj R	ADJ UNIT PRICE	ORIG COND	YEAR ON	YEAR ACTUAL	Q	% COND	OB/XF MKT VALUE	NOTES
1	0500	FP-PRE FAB	0	100	0	0	1.00	UT	3,500.00	3,500.00	100	1991	1991	3	68	2,380	
2	0811	CONCRETE B	0	100	38	17	646.00	SF	5.20	5.20	100	1991	1991	3	59.5	1,999	
3	0858	SCULP CONC	0	100	0	0	207.00	SF	13.00	13.00	100	1991	1991	3	86	2,314	
4	0911	SCRN RM A	0	100	0	0	730.00	SF	17.50	17.50	100	2018	2018	3	78	9,965	
5	0858	SCULP CONC	0	100	0	0	619.00	SF	13.00	13.00	100	2001	2001	3	94	7,564	

LAND DESCRIPTION

TOTAL OB/XF 24,222

LN	USE CODE	CLS	LAND USE DESCRIPTION	CAP	RD	LOC ZONE	FRONT	DEPTH	TOT LND UTS	UNIT TYPE	DT	DPTH FACT	% COND	TOT ADJ	UNIT PRICE	ADJ UNIT PRICE	LAND VALUE	OTHER ADJUSTMENTS AND NOTES	YEAR	DENSITY	DECL	FRZ	YR	CONSRV
1	000140	C	RES GOLF	100		PUD	0.00	0.00	1.00	LT		1.00	1.00	1.00	500,000.00	500,000.00	500,000							

REVIEW DATE 05/12/2019 BY KBA Total Acres: 0.00 Total Land Value: 500,000 Market: 0 Agricultural: 0 Common: 500,000 PRINTED 07/30/2025 BY SYS