LOT 28 & S-2 OF LOT 29
IN OR 2184/1449
GOLFSIDE AT SUMMER BEACH #1

SPELLMAN FAMILY TRUST/SPELLMAN SUSAN A TRUSTEE
1604 REGATTA DR
FERNANDINA BEACH, FL 32034

2025

00-SB-30-065A-0028-0000

NASSAU COUNTY PROPERTY

BUILDING CHARACTERISTICS

ELEMENT	CD	CONSTRUCTION
Exterior Wall	16	WD FR STUC 100
Roof Structur	08	IRREGULAR 100
Roof Cover	03	COMP SHNGL 100
Interior Wall	05	DRYWALL 100
Interior Floo	11	CLAY TILE 60
Interior Floo	14	CARPET 40
Air Condition	03	CENTRAL 100
Heating Type	04	AIR DUCTED 100
Bedrooms		6 100
Bathrooms		5 100
Frame	02	WOOD FRAME 100
Stories	2.	2. 100
Units		0 100
Quality	01	Quality Level 01
DOR CODE	0100	SINGLE FAMILY
MAP NUM		MKT AREA 03
NEIGHBORHOOD/LOC	3019.00	

AREA TYPE	TOTAL GROSS AREA	PCT OF BASE	YEAR	TOT ADJ AREA	SUBAREA MARKET VALUE
BAS	2,869	100	1998	2,869	401,784
FGR	510	55	1998	280	39,212
FOP	126	30	1998	38	5,321
FSP	508	40	2008	203	28,428
FUS	893	100	1998	893	125,059
FUS	427	100	2008	427	59,799
PTO	28	5	1998	1	140
STP	8	10	1998	1	140
STP	14	10	1998	1	140
STP	18	10	1998	2	280
TOTALS	5,401			4,715	660,304

MARKET ADJUSTMENTS

TYPE	MDL	EFF. AREA	TOT ADJ PTS	EFF. BASE RATE	REPL. COST NEW	AYB	EYB	ECON	FNCT		NORM	% COND
0900	11	4,715	120.5582	159.14	750,345	1998	2000	0	0	0	12.00	88.00

1 SNGL FAM – 100% - 2003 Heated Area: 4189 HX Base Yr 2003

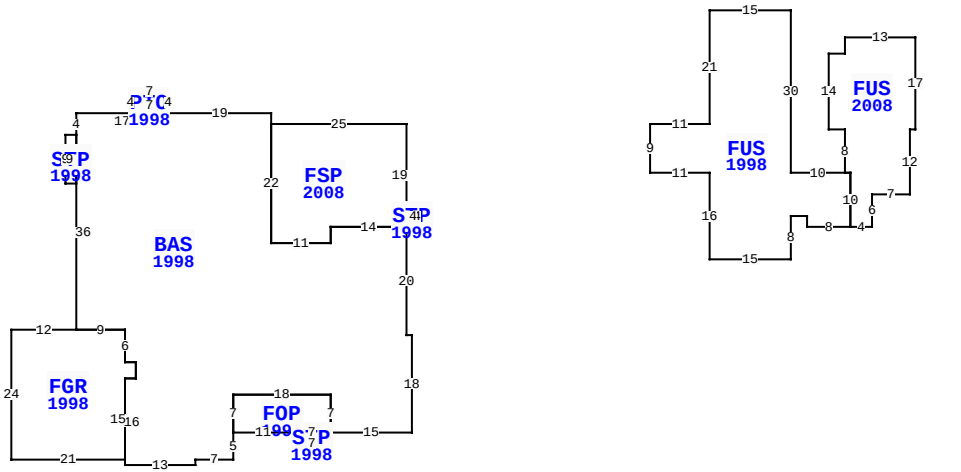

1604 REGATTA DR, FERNANDINA BEACH

BLD DATE		LGL DATE	
XF DATE		LAND DATE	03/26/2024 MLU
INC DATE		AG DATE	

VALUATION SUMMARY

VALUATION BY		STANDARD
Tax Group: 8	Tax Dist:	
BUILDING MARKET VALUE		660,304
TOTAL MARKET OB/XF VALUE		37,515
TOTAL LAND VALUE - MARKET		500,000
TOTAL MARKET VALUE		1,197,819
SOH/AGL Deduction		447,424
ASSESSED VALUE		750,395
TOTAL EXEMPTION VALUE	HX HB WX	55,722
BASE TAXABLE VALUE		694,673
TOTAL JUST VALUE		1,197,819
NCON VALUE		0
INCOME VALUE		
PREVIOUS YEAR MKT VALUE		1,167,449

PERMIT NUM	DESCRIPTION	AMT	ISSUED
R11108	REPAIR/RRF	2,920	03/01/2008
M13656	MECH OTHER	0	03/01/2008
B21123	ADDITION	0	02/01/2008
B0311990	XFOB	9,042	11/01/2003
B0311331	SWIM POOL	17,000	06/01/2003
B9805009	NEW CONSTR	230,000	05/01/1998

SALES DATA

OFF RECORD Number	DATE	TYPE INST	Q / U	V / I	RSN CD	SALE PRICE
2184/1449	3/19/2018	WD	U	I	11	100
GRANTOR: SUSAN A SPELLMAN TRUS						
GRANTEE: SPELLMAN FAMILY TRU						
1096/1592	11/25/2002	WD	Q	I		875,000
GRANTOR: COTTLE STANLEY H & DE						
GRANTEE: SPELLMAN SUSAN A TR						

BUILDING NOTES

BUILDING DIMENSIONS

FSP=[YR=2008] W25 BAS=[YR=1998] N2 W19 PTO=[YR=1998] N4 W7 S4 E7$ W17 S4 STP=[YR=1998] W2 S9 E2 N9$ S36 FGR=[YR=1998] W12 S24 E21 N15 E2 N3 W2 N6 W9$ E9 S6 E2 S3 W2 S16 E13 N1 E7 N5 FOP=[YR=1998] E11 STP=[YR=1998] S2 E7 N2 W7$ E7 N7 W18 S7$ N7 E18 S7 E15 N18 W1 N20 W14 S3 W11 N22$ S22 E11 N3 E14 STP=[YR=1998] E2 N4 W2 S4$ N19$ PTR= E45 FUS=[YR=1998] E11 N21 E15 S30 E10 FUS=[YR=2008] N8 W3 N14 E3 N3 E13 S17 W1 S12 W7 S6 W4 N10 W1 $ E1 S10 W8 N2 W3 S8 W15 N16 W11 N9$ W45 $.

EXTRA FEATURES

LN	OB/XF CODE	DESCRIPTION	BLD	CAP	L	W	UNITS	UT	Adj R	ADJ UNIT PRICE	ORIG COND	YEAR ON	YEAR ACTUAL	Q	% COND	OB/XF MKT VALUE	NOTES
1	0504	FP-ELECTRI	0	100	0	0	1.00	UT	2,000.00	2,000.00	100	1998	1998	3	80	1,600	
2	0855	CONC PAVER	0	100	0	0	1,760.00	SF	7.00	7.00	100	2013	2013	3	93	11,458	
3	0855	CONC PAVER	0	100	0	0	564.00	SF	7.00	7.00	100	2013	2013	3	93	3,672	
4	0825	BRICK	0	100	0	0	769.00	SF	12.50	12.50	100	2003	2003	3	95	9,132	
5	0861	POOL GUNIT	0	100	0	0	269.00	SF	85.00	85.00	100	2003	2003	3	29	6,631	
6	0910	SCRN RM L	0	100	33	33	1,089.00	SF	15.00	15.00	100	2003	2003	3	20	3,267	
7	0877	JACUZZI	0	100	0	0	1.00	UT	1,000.00	1,000.00	100	2003	2003	3	20	200	
8	0463	FENCE GATE	0	100	0	0	1.00	UT	300.00	300.00	100	1999	1999	3	45	135	
9	1126	CB/STC 8"	0	100	0	0	170.00	SF	8.00	8.00	100	1999	1999	3	75	1,020	
10	0871	POOL HTR R	0	100	0	0	1.00	UT	2,000.00	2,000.00	100	2003	2003	3	20	400	

TOTAL OB/XF 37,515

LAND DESCRIPTION

LN	USE CODE	CLS	LAND USE DESCRIPTION	CAP	RD	LOC ZONE	FRONT	DEPTH	TOT LND UTS	UNIT TYPE	DT	DPTH FACT	% COND	TOT ADJ	UNIT PRICE	ADJ UNIT PRICE	LAND VALUE	OTHER ADJUSTMENTS AND NOTES	YEAR	DENSITY	DECL	FRZ	YR	CONSRV
1	000140	C	RES GOLF	100		PUD	0.00	0.00	1.00	LT		1.00	1.00	1.00	500,000.00	500,000.00	500,000							

REVIEW DATE 07/24/2019 BY DJA Total Acres: 0.00 Total Land Value: 500,000 Market: 0 Agricultural: 0 Common: 500,000 PRINTED 07/30/2025 BY SYS