LOT 12 & PT SECT 12-2N-28
IN OR 2035/696
GOLFSIDE AT SUMMER BEACH #1

THOMPSON HUGH MAC JR
1676 REGATTA DRIVE
FERNANDINA BEACH, FL 32034

2025

00-SB-30-065A-0012-0000

BUILDING CHARACTERISTICS

ELEMENT	CD	CONSTRUCTION
Exterior Wall	14	WD SHINGLE 100
Roof Structur	08	IRREGULAR 100
Roof Cover	03	COMP SHNGL 100
Interior Wall	05	DRYWALL 100
Interior Floo	12	HARDWOOD 50
Interior Floo	14	CARPET 50
Air Condition	03	CENTRAL 100
Heating Type	04	AIR DUCTED 100
Bedrooms		4 100
Bathrooms		3 100
Frame	02	WOOD FRAME 100
Stories	2.	2. 100
Units		0 100
Quality	04	Quality Level 04
DOR CODE	0100	SINGLE FAMILY
MAP NUM		MKT AREA 03
NEIGHBORHOOD/LOC	3019.00	

AREA TYPE	TOTAL GROSS AREA	PCT OF BASE	YEAR	TOT ADJ AREA	SUBAREA MARKET VALUE
BAS	2,821	100	1998	2,821	533,161
FGR	518	55	1998	285	53,864
FOP	144	30	1998	43	8,127
FOP	310	30	1998	93	17,577
FUS	262	100	1998	262	49,518
UOP	18	20	1998	4	756
UOP	21	20	1998	4	756
UOP	60	20	1998	12	2,268
TOTALS	4,154			3,524	666,026

MARKET ADJUSTMENTS

TYPE	MDL	EFF. AREA	TOT ADJ PTS	EFF. BASE RATE	REPL. COST NEW	AYB	EYB	ECON	FNCT		NORM	% COND
0500	11	3,524	133.6500	211.17	744,163	1998	2003	0	0	0	10.50	89.50

1 SFR CUST – 100% - 2019 Heated Area: 3083 HX Base Yr 2019

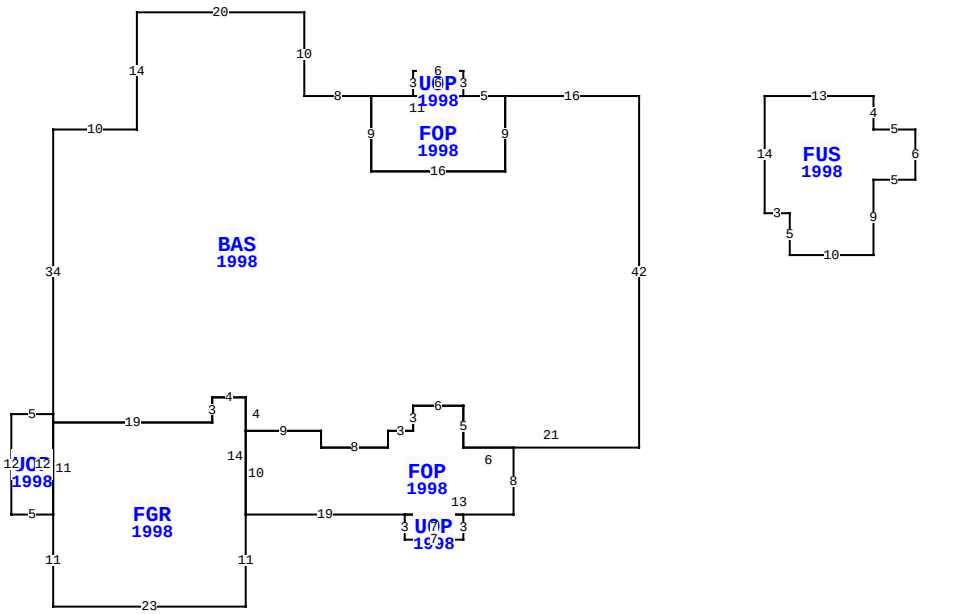

1676 REGATTA DR, FERNANDINA BEACH

BLD DATE		LGL DATE	
XF DATE		LAND DATE	03/26/2024 MLU
INC DATE		AG DATE	

NASSAU COUNTY PROPERTY

PAGE 1 of 1 8

VALUATION SUMMARY

VALUATION BY		STANDARD
Tax Group: 8	Tax Dist:	
BUILDING MARKET VALUE		666,026
TOTAL MARKET OB/XF VALUE		11,873
TOTAL LAND VALUE - MARKET		500,000
TOTAL MARKET VALUE		1,177,899
SOH/AGL Deduction		525,950
ASSESSED VALUE		651,949
TOTAL EXEMPTION VALUE	HX HB	50,722
BASE TAXABLE VALUE		601,227
TOTAL JUST VALUE		1,177,899
NCON VALUE		0
INCOME VALUE		
PREVIOUS YEAR MKT VALUE		1,147,850

PERMIT NUM	DESCRIPTION	AMT	ISSUED
20214939	REPAIR/RRF	0	05/01/2021
B9704018	NEW CONSTR	350,000	06/01/1997

SALES DATA

OFF RECORD Number	DATE	TYPE INST	Q / U	V / I	RSN CD	SALE PRICE
2035/0696	3/16/2016	WD	Q	I	01	760,000
GRANTOR: TROXEL PATRICIA H & R						
GRANTEE: THOMPSON HUGH MAC J						
1177/1489	10/03/2003	WD	Q	I		700,000
GRANTOR: MOCK WILLIAM J JR & V						
GRANTEE: TROXEL PATRICIA H &						

BUILDING NOTES

BUILDING DIMENSIONS

BAS=[YR=1998] W16 FOP=[YR=1998] W5 UOP=[YR=1998] N3 W6 S3 E6 $ W11 S9 E16 N9 $ S9 W16 N9 W8 N10 W20 S14 W10 S34 UOP=[YR=1998] W5 S12 E5 FGR=[YR=1998] S11 E23 N11 FOP=[YR=1998] E19 UOP=[YR=1998] S3 E7 N3 W7 $ E13 N8 W6 N5 W6 S3 W3 S2 W8 N2 W9 S10 $ N14 W4 S3 W19 S11 $ N12 $ S1 E19 N3 E4 S4 E9 S2 E8 N2 E3 N3 E6 S5 E21 N42 $ PTR= E15 FUS=[YR=1998] E13 S4 E5 S6 W5 S9 W10 N5 W3 N14 $ W15 $.

EXTRA FEATURES

LN	OB/XF CODE	DESCRIPTION	BLD	CAP	L	W	UNITS	UT	Adj R	ADJ UNIT PRICE	ORIG COND	YEAR ON	YEAR ACTUAL	Q	% COND	OB/XF MKT VALUE	NOTES
1	0504	FP-ELECTRI	0	100	0	0	1.00	UT	2,000.00	2,000.00	100	1998	1998	3	80	1,600	
2	0858	SCULP CONC	0	100	0	0	684.00	SF	13.00	13.00	100	1998	1998	3	92	8,181	
3	0858	SCULP CONC	0	100	0	0	159.00	SF	13.00	13.00	100	1998	1998	3	92	1,902	
4	0810	CONCRETE A	0	100	0	0	40.00	SF	6.50	6.50	100	1998	1998	3	73	190	

LAND DESCRIPTION

TOTAL OB/XF 11,873

LN	USE CODE	CLS	LAND USE DESCRIPTION	CAP	RD	LOC ZONE	FRONT	DEPTH	TOT LND UTS	UNIT TYPE	DT	DPTH FACT	% COND	TOT ADJ	UNIT PRICE	ADJ UNIT PRICE	LAND VALUE	OTHER ADJUSTMENTS AND NOTES	YEAR	DENSITY	DECL	FRZ	YR	CONSRV
1	000140	C	RES GOLF	100		PUD	0.00	0.00	1.00	LT		1.00	1.00	1.00	500,000.00	500,000.00	500,000							

REVIEW DATE 11/19/2021 BY RK Total Acres: 0.00 Total Land Value: 500,000 Market: 0 Agricultural: 0 Common: 500,000 PRINTED 07/30/2025 BY SYS