BLOCK 271 PT LOT 11 EAST
OF SAR R/W & LOT 23
IN OR 2364/649

RITCH TIM & DONNA/KAVALIEROS NICK ET AL
89 OCEAN COURSE DR
PONTE VEDRA BEACH, FL 32082

**2025**

**00-00-31-1800-0271-0110**

## BUILDING CHARACTERISTICS

| ELEMENT | CD | CONSTRUCTION |
|---|---|---|
| Exterior Wall | 10 | ABOVE AVG 70 |
| Exterior Wall | 20 | FACE BRICK 30 |
| Roof Structur | 01 | FLAT 100 |
| Roof Cover | 04 | BUILT-UP 100 |
| Interior Wall | 05 | DRYWALL 100 |
| Interior Floo | 11 | CLAY TILE 90 |
| Interior Floo | 12 | HARDWOOD 10 |
| Air Condition | 03 | CENTRAL 100 |
| Heating Type | 04 | AIR DUCTED 100 |
| Bedrooms | | 3 100 |
| Bathrooms | | 2.5 100 |
| Frame | 03 | MASONRY 100 |
| Stories | 3. | 3. 100 |
| Units | | 0 100 |
| Quality | 04 | Quality Level 04 |
| DOR CODE | 0100 | SINGLE FAMILY |
| MAP NUM | | MKT AREA 01 |
| NEIGHBORHOOD/LOC | 1004.00 | |

| AREA TYPE | TOTAL GROSS AREA | PCT OF BASE | YEAR | TOT ADJ AREA | SUBAREA MARKET VALUE |
|---|---|---|---|---|---|
| BAS | 1,180 | 100 | 2019 | 1,180 | 258,644 |
| FGR | 350 | 55 | 2019 | 192 | 42,085 |
| FOP | 42 | 30 | 2019 | 13 | 2,849 |
| FOP | 220 | 30 | 2019 | 66 | 14,466 |
| FOP | 220 | 30 | 2019 | 66 | 14,466 |
| FUS | 1,450 | 100 | 2019 | 1,450 | 317,826 |
| STR | 80 | 10 | 2019 | 8 | 1,753 |
| STR | 92 | 10 | 2019 | 9 | 1,973 |
| UOP | 84 | 20 | 2019 | 17 | 3,726 |
| UOP | 1,438 | 20 | 2019 | 288 | 63,126 |
| TOTALS | 5,156 | | | 3,289 | 720,917 |

## MARKET ADJUSTMENTS

| TYPE | MDL | EFF. AREA | TOT ADJ PTS | EFF. BASE RATE | REPL. COST NEW | AYB | EYB | ECON | FNCT | | NORM | % COND |
|---|---|---|---|---|---|---|---|---|---|---|---|---|
| 0500 | 11 | 3,289 | 142.3277 | 224.88 | 739,630 | 2019 | 2019 | 0 | 0 | 0 | 2.53 | 97.47 |

1 SFR CUST – 0% - 0 Heated Area: 2630 HX Base Yr

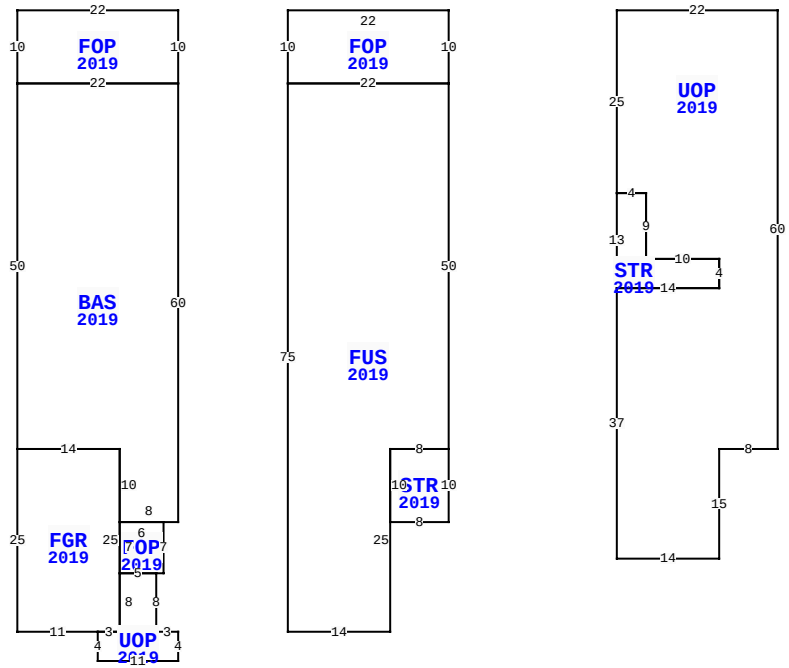


117 S 2ND ST, FERNANDINA BEACH

| | | | |
|---|---|---|---|
| BLD DATE | | LGL DATE | |
| XF DATE | | LAND DATE | |
| INC DATE | | AG DATE | |

## NASSAU COUNTY PROPERTY

PAGE 1 of 1 2

### VALUATION SUMMARY

| | |
|---|---|
| VALUATION BY | STANDARD |
| Tax Group: 2 | Tax Dist: |
| BUILDING MARKET VALUE | 720,917 |
| TOTAL MARKET OB/XF VALUE | 3,085 |
| TOTAL LAND VALUE - MARKET | 209,100 |
| TOTAL MARKET VALUE | 933,102 |
| SOH/AGL Deduction | 0 |
| ASSESSED VALUE | 933,102 |
| TOTAL EXEMPTION VALUE | 0 |
| BASE TAXABLE VALUE | 933,102 |
| TOTAL JUST VALUE | 933,102 |
| NCON VALUE | 0 |
| INCOME VALUE | |
| PREVIOUS YEAR MKT VALUE | 900,693 |

| PERMIT NUM | DESCRIPTION | AMT | ISSUED |
|---|---|---|---|
| 20181641 | CO ISSUED | 0 | 12/23/2019 |
| 20181641 | NEW CONSTR | 338,272 | 05/15/2018 |
| 20171904 | DEMOLITION | 31,500 | 06/20/2017 |

## SALES DATA

| OFF RECORD Number | DATE | TYPE INST | Q U | V I | RSN CD | SALE PRICE |
|---|---|---|---|---|---|---|
| 2364/0649 | 5/26/2020 | WD | U | I | 30 | 130,000 |
| GRANTOR: WAYA EQUANI LLC | | | | | | |
| GRANTEE: RITCH TIM & DONNA E | | | | | | |
| 2250/1956 | 1/25/2019 | SW | U | V | 37 | 193,500 |
| GRANTOR: ARTISAN HOMES LLC | | | | | | |
| GRANTEE: WAYA EQUANI LLC | | | | | | |

## BUILDING NOTES

## BUILDING DIMENSIONS

FOP=[YR=2019] W22 S10 BAS=[YR=2019] S50 FGR=[YR=2019] S25 E11 UOP=[YR=2019] S4 E11 N4 W3 N8 FOP=[YR=2019] E1 N7 W6 S7 E5$ W5 S8 W3$ E3 N25 W14$ E14 S10 E8 N60 W22 $ E22 N10$ PTR= E15 FOP=[YR=2019] E22 S10 FUS=[YR=2019] S50 STR=[YR=2019] S10 W8 N10 E8$ W8 S25 W14 N75 E22$ W22 N10$ W15$ PTR=E60 UOP=[YR=2019] E22 S60 W8 S15 W14 N37 STR=[YR=2019] N13 E4 S9 E10 S4 W14$ E14 N4 W10 N9 W4 N25$ W60$.

## EXTRA FEATURES

| LN | OB/XF CODE | DESCRIPTION | BLD | CAP | L | W | UNITS | UT | Adj R | ADJ UNIT PRICE | ORIG COND | YEAR ON | YEAR ACTUAL | Q | % COND | OB/XF MKT VALUE | NOTES |
|---|---|---|---|---|---|---|---|---|---|---|---|---|---|---|---|---|---|
| 1 | 0855 | CONC PAVER | 0 | 0 | 0 | 0 | 318.00 | SF | 10.00 | 10.00 | 100 | 2019 | 2019 | 3 | 97 | 3,085 | |

## LAND DESCRIPTION

TOTAL OB/XF 3,085

| LN | USE CODE | CLS | LAND USE DESCRIPTION | CAP | RD | LOC ZONE | FRONT | DEPTH | TOT LND UTS | UNIT TYPE | DT | DPTH FACT | % COND | TOT ADJ | UNIT PRICE | ADJ UNIT PRICE | LAND VALUE | OTHER ADJUSTMENTS AND NOTES | YEAR | DENSITY | DECL | FRZ | YR | CONSRV |
|---|---|---|---|---|---|---|---|---|---|---|---|---|---|---|---|---|---|---|---|---|---|---|---|---|
| 1 | 000100 | C | RES | 0 | 0003 | MU-1 | 25.00 | 0.00 | 3,485.00 | SF | | 1.00 | 1.00 | 1.00 | 60.00 | 60.00 | 209,100 | | | | | | | |

REVIEW DATE 12/31/2019 BY DJ Total Acres: 0.08 Total Land Value: 209,100 Market: 0 Agricultural: 0 Common: 209,100 PRINTED 07/30/2025 BY SYS