BLOCK 270 LOT 20
CITY OF FDNA BEACH

METZ RUSSELL DAVID & JAIMI MOORE
1037 SHIPWATCH DR E
JACKSONVILLE, FL 32225

2025

00-00-31-1800-0270-0200

BUILDING CHARACTERISTICS

ELEMENT	CD	CONSTRUCTION
Exterior Wall	10	ABOVE AVG 70
Exterior Wall	20	FACE BRICK 30
Roof Structur	01	FLAT 100
Roof Cover	04	BUILT-UP 100
Interior Wall	05	DRYWALL 100
Interior Floo	11	CLAY TILE 70
Interior Floo	14	CARPET 30
Air Condition	03	CENTRAL 100
Heating Type	04	AIR DUCTED 100
Bedrooms		3 100
Bathrooms		2.5 100
Frame	03	MASONRY 100
Stories	2.	2. 100
Units		0 100
Quality	01	Quality Level 01
DOR CODE	0100	SINGLE FAMILY
MAP NUM		MKT AREA 01
NEIGHBORHOOD/LOC	1010.0400	

AREA TYPE	TOTAL GROSS AREA	PCT OF BASE	YEAR	TOT ADJ AREA	SUBAREA MARKET VALUE
BAS	1,070	100	2024	1,070	343,811
FDG	484	60	2024	290	93,182
FOP	30	30	2024	9	2,892
FUS	60	100	2024	60	19,280
FUS	1,048	100	2024	1,048	336,743
STR	52	10	2024	5	1,606
STR	68	10	2024	7	2,249
UOP	972	20	2024	194	62,336
TOTALS	3,784			2,683	862,100

MARKET ADJUSTMENTS

TYPE	MDL	EFF. AREA	TOT ADJ PTS	EFF. BASE RATE	REPL. COST NEW	AYB	EYB	ECON	FNCT		NORM	% COND
0320	22	2,683	322.0628	322.06	864,087	2023	2023	0	0	0	0.23	99.77

1 TOWNHOUSE – 0% - 2024 Heated Area: 2178 HX Base Yr

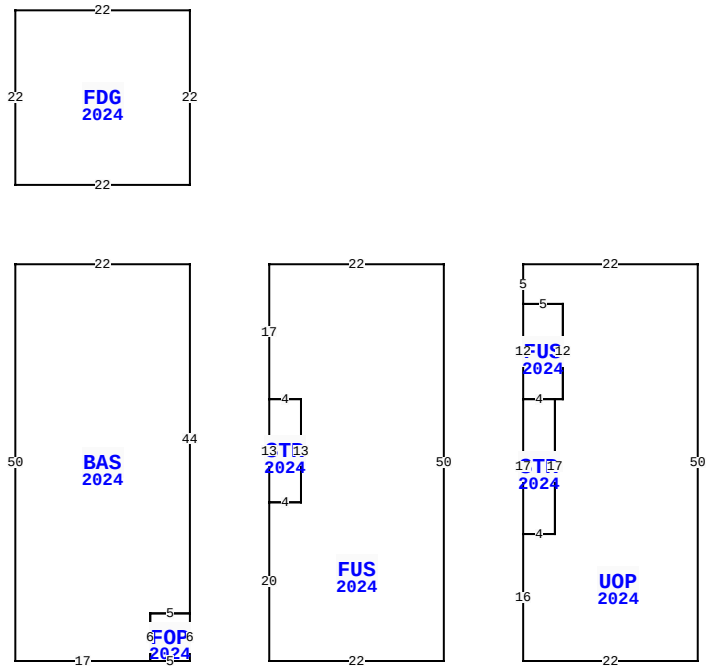

147 S 3RD ST, FERNANDINA BEACH

BLD DATE		LGL DATE	
XF DATE		LAND DATE	03/25/2024 MLU
INC DATE		AG DATE	

NASSAU COUNTY PROPERTY

PAGE 1 of 1 2

VALUATION SUMMARY

VALUATION BY	STANDARD
Tax Group: 2	Tax Dist:
BUILDING MARKET VALUE	862,100
TOTAL MARKET OB/XF VALUE	11,860
TOTAL LAND VALUE - MARKET	125,000
TOTAL MARKET VALUE	998,960
SOH/AGL Deduction	0
ASSESSED VALUE	998,960
TOTAL EXEMPTION VALUE	0
BASE TAXABLE VALUE	998,960
TOTAL JUST VALUE	998,960
NCON VALUE	0
INCOME VALUE	
PREVIOUS YEAR MKT VALUE	957,751

PERMIT NUM	DESCRIPTION	AMT	ISSUED
2020-0434			03/28/2023
20200434	NEW CONSTR	295,069	10/30/2020
20200435	GARAGE	23,135	10/30/2020
20183240	NEW CONSTR	283,531	09/01/2018

SALES DATA

OFF RECORD Number	DATE	TYPE INST	Q / U	V / I	RSN CD	SALE PRICE
2633/1275	3/24/2023	SW	U	I	32	749,900
GRANTOR: HARBOR VIEW-ARTISAN L						
GRANTEE: METZ RUSSELL DAVID						
2104/1308	2/28/2017	SW	Q	I	05	1,750,000
GRANTOR: FERNANDINA LUMBER & S						
GRANTEE: HARBOR VIEW-ARTISAN						

BUILDING NOTES

BUILDING DIMENSIONS

BAS=[YR=2024;ORIG=10,10] E22 S44 W5 S6 W17 N50 $
FDG=[YR=2024;ORIG=10,0] E22 N22 W22 S22 $
FUS=[YR=2024;ORIG=42,10] E22 S50 W22 N20 E4 N13 W4 N17 $
STR=[YR=2024;ORIG=46,27] W4 S13 E4 N13 $
FOP=[YR=2024;ORIG=27,54] E5 S6 W5 N6 $
UOP=[YR=2024;ORIG=74,10] E22 S50 W22 N16 E4 N17 E1 N12 W5 N5 $
STR=[YR=2024;ORIG=74,27] E4 S17 W4 N17 $
FUS=[YR=2024;ORIG=74,15] E5 S12 W1 W4 N12 $
.

EXTRA FEATURES

LN	OB/XF CODE	DESCRIPTION	BLD	CAP	L	W	UNITS	UT	Adj R	ADJ UNIT PRICE	ORIG COND	YEAR ON	YEAR ACTUAL	Q	% COND	OB/XF MKT VALUE	NOTES
1	0409	ELEVATOR R	0	0	0	0	1.00	UT	10,200.00	10,200.00	100	2024	2023		100	10,200	
2	0855	CONC PAVER	0	0	0	0	166.00	SF	10.00	10.00	100	2024	2023		100	1,660	

LAND DESCRIPTION

TOTAL OB/XF 11,860

LN	USE CODE	CLS	LAND USE DESCRIPTION	CAP	RD	LOC ZONE	FRONT	DEPTH	TOT LND UTS	UNIT TYPE	DT	DPTH FACT	% COND	TOT ADJ	UNIT PRICE	ADJ UNIT PRICE	LAND VALUE	OTHER ADJUSTMENTS AND NOTES	YEAR	DENSITY	DECL	FRZ	YR	CONSRV
1	000310	C	TOWNHOUSE	0	0006	MU-1	0.00	0.00	2,500.00	SF		1.00	1.00	1.00	50.00	50.00	125,000							

REVIEW DATE 01/31/2024 BY KBA Total Acres: 0.00 Total Land Value: 125,000 Market: 0 Agricultural: 0 Common: 125,000 PRINTED 07/30/2025 BY SYS