BLOCK 259 E100 FT OF S150 FT
OF LOT 1
CITY OF FDNA BEACH

WILSON DOUGLAS W & DONNA M L/E/
1425 ATLANTIC AVE
FERNANDINA BEACH, FL 32034

2025

00-00-31-1800-0259-0011

NASSAU COUNTY PROPERTY

BUILDING CHARACTERISTICS

ELEMENT	CD	CONSTRUCTION
Exterior Wall	17	CB STUCCO 100
Roof Structur	03	GABLE/HIP 100
Roof Cover	03	COMP SHNGL 100
Interior Wall	05	DRYWALL 100
Interior Floo	14	CARPET 80
Interior Floo	11	CLAY TILE 20
Air Condition	03	CENTRAL 100
Heating Type	04	AIR DUCTED 100
Bedrooms		3 100
Bathrooms		2 100
Frame	03	MASONRY 100
Stories	1.	1. 100
Units		0 100
BUD8 Adjustme	02	DIST FB 100
Occupancy	00	NONE 100
Quality	03	Quality Level 03
DOR CODE	0100	SINGLE FAMILY
MAP NUM		MKT AREA 01
NEIGHBORHOOD/LOC	1012.00	

AREA TYPE	TOTAL GROSS AREA	PCT OF BASE	YEAR	TOT ADJ AREA	SUBAREA MARKET VALUE
BAS	750	100	1993	750	77,191
BAS	1,921	100	1993	1,921	197,711
FEP	164	80	2008	131	13,482
FOP	32	30	1993	10	1,030
STP	32	10	2008	3	308
UGR	690	45	1993	310	31,906
UOP	35	20	1993	7	720
TOTALS	3,624			3,132	322,348

MARKET ADJUSTMENTS

TYPE	MDL	EFF. AREA	TOT ADJ PTS	EFF. BASE RATE	REPL. COST NEW	AYB	EYB	ECON	FNCT		NORM	% COND
0900	01	3,132	98.0720	129.46	405,469	1949	1983	0	0	0	20.50	79.50

1 SNGL FAM – 100% - 2025 Heated Area: 2671 HX Base Yr 2025

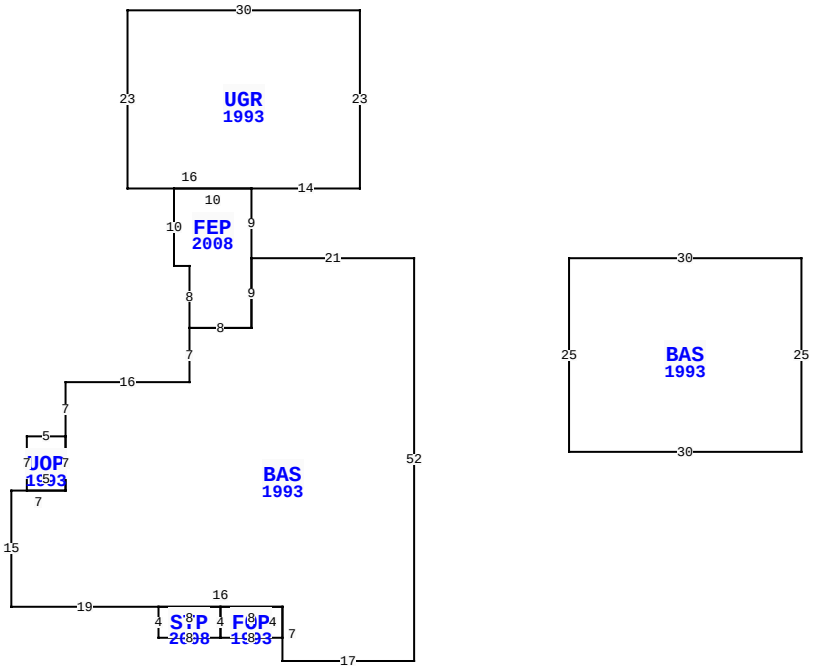

1425 ATLANTIC AV, FERNANDINA BEACH

BLD DATE	08/01/2014 KK	LGL DATE	
XF DATE		LAND DATE	03/27/2024 MLU
INC DATE		AG DATE	

VALUATION SUMMARY

VALUATION BY		STANDARD
Tax Group: 2	Tax Dist:	
BUILDING MARKET VALUE		322,348
TOTAL MARKET OB/XF VALUE		8,712
TOTAL LAND VALUE - MARKET		368,000
TOTAL MARKET VALUE		699,060
SOH/AGL Deduction		0
ASSESSED VALUE		699,060
TOTAL EXEMPTION VALUE	HX HB	50,722
BASE TAXABLE VALUE		648,338
TOTAL JUST VALUE		699,060
NCON VALUE		0
INCOME VALUE		
PREVIOUS YEAR MKT VALUE		684,041

PERMIT NUM	DESCRIPTION	AMT	ISSUED
20090563	OTHER	1,150	05/06/2009
20070902	REPAIR/RRF	16,900	05/23/2007
6483	REPAIR/RRF	1,450	04/15/1991

SALES DATA

OFF RECORD Number	DATE	TYPE INST	Q / U	V / I	RSN CD	SALE PRICE
2790/1763	5/29/2025	LE	U	I	11	100
GRANTOR: WILSON DOUGLAS W & DO						
GRANTEE: WILSON AMANDA MARIE						
2539/1100	2/16/2022	WD	Q	I	01	702,000
GRANTOR: JONES MARVIN E JR,JAC						
GRANTEE: WILSON DOUGLAS W &						

BUILDING NOTES

BUILDING DIMENSIONS

BAS=[YR=1993] W21 FEP=[YR=2008] N9 UGR=[YR=1993] E14 N23 W30 S23 E16$ W10 S10 E2 S8 E8 N9$ S9 W8 S7 W16 S7 UOP=[YR=1993] W5 S7 E5 N7$ S7 W7 S15 E19 STP=[YR=2008] S4 E8 FOP=[YR=1993] E8 N4 W8 S4$ N4 W8$ E16 S7 E17 N52$ PTR=E20 BAS=[YR=1993] E30 S25 W30 N25$ W20$.

EXTRA FEATURES

LN	OB/XF CODE	DESCRIPTION	BLD	CAP	L	W	UNITS	UT	Adj R	ADJ UNIT PRICE	ORIG COND	YEAR ON	YEAR ACTUAL	Q	% COND	OB/XF MKT VALUE	NOTES
1	0940	SHEDS/PORT	0	100	0	0	120.00	SF	30.00	30.00	100	1980	1980	3	20	720	
2	0500	FP-PRE FAB	0	100	0	0	1.00	UT	3,500.00	3,500.00	100	1949	1949	3	20	700	
3	0810	CONCRETE A	0	100	0	0	800.00	SF	6.50	6.50	100	1960	1960	3	20	1,040	
4	0351	CARPORT MT	0	100	20	23	460.00	SF	10.00	10.00	100	1993	1993	3	20	920	
5	0812	CONCRETE C	0	100	0	0	2,083.00	SF	4.00	4.00	100	1993	1993	3	64	5,332	

LAND DESCRIPTION

TOTAL OB/XF 8,712

LN	USE CODE	CLS	LAND USE DESCRIPTION	CAP	RD	LOC ZONE	FRONT	DEPTH	TOT LND UTS	UNIT TYPE	DT	DPTH FACT	% COND	TOT ADJ	UNIT PRICE	ADJ UNIT PRICE	LAND VALUE	OTHER ADJUSTMENTS AND NOTES	YEAR	DENSITY	DECL	FRZ	YR	CONSRV
1	000100	C	RES	100	0003	R-1	100.00	150.00	100.00	FF	1	1.15	1.00	1.15	3,200.00	3,680.00	368,000							

REVIEW DATE 08/27/2019 BY DJA Total Acres: 0.00 Total Land Value: 368,000 Market: 0 Agricultural: 0 Common: 368,000 PRINTED 07/30/2025 BY SYS