SUB LOT C & D OF 9
EX S-1 OF SUB C
258 PB 2 PG 54

COVER CHARLES B
217 N 15TH ST
FERNANDINA BEACH, FL 32034

2025

00-00-31-1800-0258-R09C

BUILDING CHARACTERISTICS

ELEMENT	CD	CONSTRUCTION
Exterior Wall	07	ASB SHNGLE 100
Roof Structur	03	GABLE/HIP 100
Roof Cover	03	COMP SHNGL 100
Interior Wall	03	PLASTER 100
Interior Floo	12	HARDWOOD 100
Air Condition	03	CENTRAL 100
Heating Type	04	AIR DUCTED 100
Bedrooms		3 100
Bathrooms		2 100
Frame	02	WOOD FRAME 100
Stories	1.	1. 100
Units		0 100
BUD8 Adjustme	02	DIST FB 100
Occupancy	00	NONE 100
Quality	03	Quality Level 03

DOR CODE 0100 SINGLE FAMILY
MAP NUM | MKT AREA 01
NEIGHBORHOOD/LOC 1007.00

AREA TYPE	TOTAL GROSS AREA	PCT OF BASE	YEAR	TOT ADJ AREA	SUBAREA MARKET VALUE
BAS	1,325	100	1993	1,325	100,045
FGR	264	55	1993	145	10,949
FOP	36	30	1993	11	830
FSP	200	40	1993	80	6,040
UOP	45	20	1993	9	680
UOP	48	20	1993	10	755
UOP	175	20	1993	35	2,643
TOTALS	2,093			1,615	121,941

MARKET ADJUSTMENTS

TYPE	MDL	EFF. AREA	TOT ADJ PTS	EFF. BASE RATE	REPL. COST NEW	AYB	EYB	ECON	FNCT		NORM	% COND
0100	01	1,615	107.1000	107.10	172,966	1950	1980	0	0	0	29.50	70.50

1 SINGLE FAM – 100% - 2023 Heated Area: 1325 HX Base Yr 2023

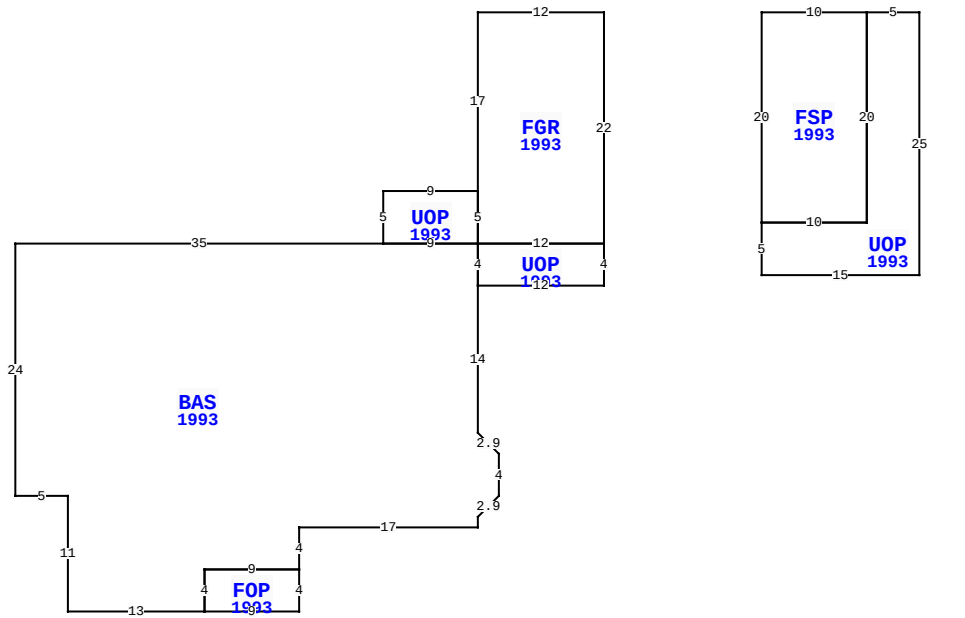

217 N 15TH ST, FERNANDINA BEACH

BLD DATE		LGL DATE	
XF DATE		LAND DATE	05/08/2025 MLU
INC DATE		AG DATE	

NASSAU COUNTY PROPERTY

PAGE 1 of 1 2

VALUATION SUMMARY

VALUATION BY		STANDARD
Tax Group: 2	Tax Dist:	
BUILDING MARKET VALUE		121,941
TOTAL MARKET OB/XF VALUE		607
TOTAL LAND VALUE - MARKET		292,500
TOTAL MARKET VALUE		415,048
SOH/AGL Deduction		0
ASSESSED VALUE		415,048
TOTAL EXEMPTION VALUE	HX HB	50,722
BASE TAXABLE VALUE		364,326
TOTAL JUST VALUE		415,048
NCON VALUE		0
INCOME VALUE		
PREVIOUS YEAR MKT VALUE		409,767

PERMIT NUM	DESCRIPTION	AMT	ISSUED
20100532	H/AC	3,000	03/31/2010
20032746	REMODEL	1,000	03/24/2003
20022000	REPAIR/RRF	4,000	11/21/2002
4821	XFOB	2,300	05/02/1988

SALES DATA

OFF RECORD Number	DATE	TYPE INST	Q U	V I	RSN CD	SALE PRICE
2454/1647	4/20/2021	WD	U	I	37	127,500
GRANTOR: DOUGHERTY ROBERT C						
GRANTEE: COVER CHARLES B						
2144/0975	8/31/2017	WD	U	I	37	50,000
GRANTOR: COVER BLAKE						
GRANTEE: DOUGHERTY ROBERT C						

BUILDING NOTES

BUILDING DIMENSIONS

FGR=[YR=1993] W12 S17 UOP=[YR=1993] W9 S5 BAS=[YR=1993] W35 S24 E5 S11 E13 FOP=[YR=1993] E9 N4 W9 S4$ N4 E9 N4 E17 N1 U2 R2 N4 U2 L2 N14 UOP=[YR=1993] E12 N4 W12 S4$ N4 W9$ E9 N5$ S5 E12 N22$ PTR=E15 FSP=[YR=1993] E10 UOP=[YR=1993] E5 S25 W15 N5 E10 N20$ S20 W10 N20$ W15$.

EXTRA FEATURES

LN	OB/XF CODE	DESCRIPTION	BLD	CAP	L	W	UNITS	UT	Adj R	ADJ UNIT PRICE	ORIG COND	YEAR ON	YEAR ACTUAL	Q	% COND	OB/XF MKT VALUE	NOTES
1	0810	CONCRETE A	0	100	37	3	111.00	SF	6.50	6.50	100	1950	1950	3	20	144	
2	0810	CONCRETE A	0	100	29	11	319.00	SF	6.50	6.50	100	1950	1950	3	20	415	
3	1242	WD DECK A	0	100	8	3	24.00	SF	10.00	10.00	100	1982	1982	3	20	48	

LAND DESCRIPTION

TOTAL OB/XF 607

LN	USE CODE	CLS	LAND USE DESCRIPTION	CAP	RD	LOC ZONE	FRONT	DEPTH	TOT LND UTS	UNIT TYPE	DT	DPTH FACT	% COND	TOT ADJ	UNIT PRICE	ADJ UNIT PRICE	LAND VALUE	OTHER ADJUSTMENTS AND NOTES	YEAR	DENSITY	DECL	FRZ	YR	CONSRV
1	000100	C	RES	100	0006	R-1	86.00	154.00	1.00	LT		1.00	1.00	1.30	225,000.00	292,500.00	292,500							

REVIEW DATE 05/12/2019 BY KBA Total Acres: 0.00 Total Land Value: 292,500 Market: 0 Agricultural: 0 Common: 292,500 PRINTED 07/30/2025 BY SYS