BLK 242 TRACTS A & B OF LOT 2
CITY OF FDNA BEACH S/D OF
SEC 23-3N-28E UNR

RABIT JESIKA JAS
87233 KIPLING DR
YULEE, FL 32097

2025

00-00-31-1800-0242-02A0

BUILDING CHARACTERISTICS

ELEMENT	CD	CONSTRUCTION
Exterior Wall	05	AVERAGE 60
Exterior Wall	20	FACE BRICK 40
Roof Structur	03	GABLE/HIP 100
Roof Cover	03	COMP SHNGL 100
Interior Wall	01	MINIMUM 100
Interior Floo	01	NONE 100
Air Condition	03	CENTRAL 100
Heating Type	04	AIR DUCTED 100
Bedrooms		5 100
Bathrooms		2.5 100
Frame	03	MASONRY 100
Stories	1.5	1.5 100
Units		0 100
BUD8 Adjustme	02	DIST FB 100
Occupancy	00	NONE 100
Quality	01	Quality Level 01
DOR CODE	0100	SINGLE FAMILY
MAP NUM		MKT AREA 01
NEIGHBORHOOD/LOC	1009.00	

AREA TYPE	TOTAL GROSS AREA	PCT OF BASE	YEAR	TOT ADJ AREA	SUBAREA MARKET VALUE
BAS	1,280	100	1993	1,280	18,785
BAS	204	100	2008	204	2,994
FEP	120	80	1994	96	1,409
FUS	704	100	1993	704	10,332
STP	20	10	2008	2	29
UCP	492	20	1993	98	1,438
UST	96	45	2008	43	631
TOTALS	2,916			2,427	35,619

MARKET ADJUSTMENTS

TYPE	MDL	EFF. AREA	TOT ADJ PTS	EFF. BASE RATE	REPL. COST NEW	AYB	EYB	ECON	FNCT	AP	NORM	% COND
0100	01	2,427	73.3824	73.38	178,093	1920	1920	0	0	35	45.23	20.00

1 SINGLE FAM – 0% - 2025 Heated Area: 2188 HX Base Yr

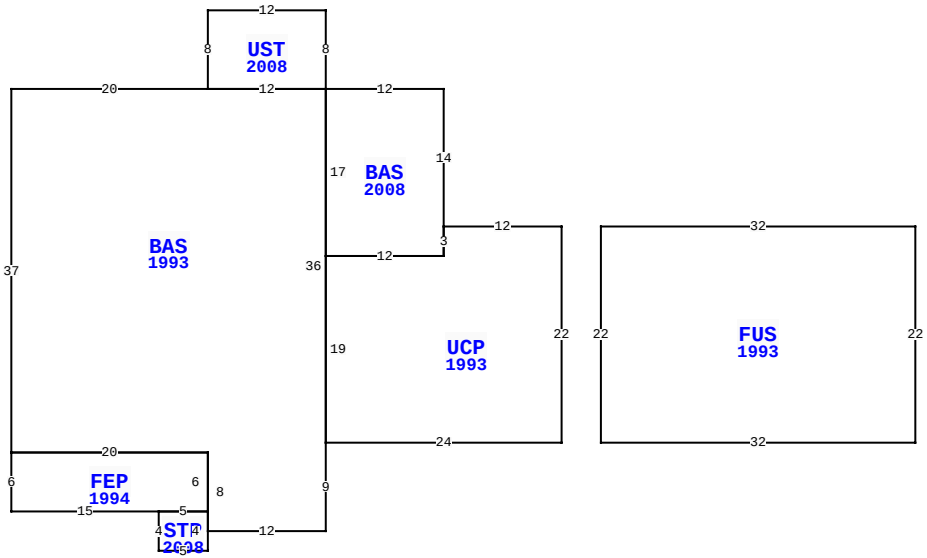

212 S 13TH ST, FERNANDINA BEACH

BLD DATE	04/09/2014 KK	LGL DATE	
XF DATE		LAND DATE	05/07/2025 MLU
INC DATE		AG DATE	

NASSAU COUNTY PROPERTY

PAGE 1 of 1 2

VALUATION SUMMARY

VALUATION BY	STANDARD
Tax Group: 2	Tax Dist:
BUILDING MARKET VALUE	35,619
TOTAL MARKET OB/XF VALUE	870
TOTAL LAND VALUE - MARKET	236,844
TOTAL MARKET VALUE	273,333
SOH/AGL Deduction	0
ASSESSED VALUE	273,333
TOTAL EXEMPTION VALUE	0
BASE TAXABLE VALUE	273,333
TOTAL JUST VALUE	273,333
NCON VALUE	0
INCOME VALUE	
PREVIOUS YEAR MKT VALUE	341,754

PERMIT NUM	DESCRIPTION	AMT	ISSUED
2024-0599	REMODEL SEE NOTES	285,430	10/17/2024
20200185	REPFIREDMG	18,000	04/13/2020

SALES DATA

OFF RECORD Number	DATE	TYPE INST	Q / U	V / I	RSN CD	SALE PRICE
9999/9999	8/30/2024	CN	Q	I	01	280,000
GRANTOR: VERRIER TRACEY H						
GRANTEE: RABIT JESIKA JAS						
2660/852	8/09/2023	WD	U	I	37	250,000
GRANTOR: COURSON CHARLES DEREK						
GRANTEE: VERRIER TRACEY H						

BUILDING NOTES

BUILDING DIMENSIONS

BAS=[YR=1993;ORIG=-12,8] W20 S37 E20 S8 E12 N9 N36 W12 $
FUS=[YR=1993;ORIG=60,44] N22 W32 S22 E32 $
UCP=[YR=1993;ORIG=0,44] E24 N22 W12 S3 W12 S19 $
BAS=[YR=2008;ORIG=12,22] N14 W12 S17 E12 N3 $
FEP=[YR=1994;ORIG=-32,45] S6 E15 E5 N6 W20 $
UST=[YR=2008;ORIG=0,0] W12 S8 E12 N8 $
STP=[YR=2008;ORIG=-17,51] S4 E5 N4 W5 $
.

EXTRA FEATURES

LN	OB/XF CODE	DESCRIPTION	BLD	CAP	L	W	UNITS	UT	Adj R	ADJ UNIT PRICE	ORIG COND	YEAR ON	YEAR ACTUAL	Q	% COND	OB/XF MKT VALUE	NOTES
1	0810	CONCRETE A	0	0	36	24	864.00	SF	1.63	1.63	100	1992	1992	3	62	870	

LAND DESCRIPTION

TOTAL OB/XF 870

LN	USE CODE	CLS	LAND USE DESCRIPTION	CAP	RD	LOC ZONE	FRONT	DEPTH	TOT LND UTS	UNIT TYPE	DT	DPTH FACT	% COND	TOT ADJ	UNIT PRICE	ADJ UNIT PRICE	LAND VALUE	OTHER ADJUSTMENTS AND NOTES	YEAR	DENSITY	DECL	FRZ	YR	CONSRV
1	000100	C	RES	0	0006	R-2	43.00	102.00	43.00	FF	1	1.02	1.00	1.02	2,700.00	2,754.00	118,422							
2	000100	C	RES	0	0006	R-2	43.00	102.00	43.00	FF	1	1.02	1.00	1.02	2,700.00	2,754.00	118,422							

REVIEW DATE 02/21/2021 BY RK Total Acres: 0.00 Total Land Value: 236,844 Market: 0 Agricultural: 0 Common: 236,844 PRINTED 07/30/2025 BY SYS