BLOCK 240 E200 FT OF N1/2 OF 7
IN OR 1417/1462
CITY OF FDNA BEACH

BUNCH WILMA
711 S 14TH ST
FERNANDINA BEACH, FL 32034

2025

00-00-31-1800-0240-0071

NASSAU COUNTY PROPERTY

BUILDING CHARACTERISTICS

ELEMENT	CD	CONSTRUCTION
Exterior Wall	15	CONC BLOCK 100
Roof Structur	03	GABLE/HIP 100
Roof Cover	03	COMP SHNGL 100
Interior Wall	05	DRYWALL 100
Interior Floo	14	CARPET 70
Interior Floo	11	CLAY TILE 30
Air Condition	03	CENTRAL 100
Heating Type	04	AIR DUCTED 100
Bedrooms		3 100
Bathrooms		1 100
Frame	02	WOOD FRAME 100
Stories	1.	1. 100
Units		0 100
BUD8 Adjustme	02	DIST FB 100
Occupancy	00	NONE 100
Quality	03	Quality Level 03
DOR CODE	0100	SINGLE FAMILY
MAP NUM		MKT AREA 01
NEIGHBORHOOD/LOC	1011.00	

AREA TYPE	TOTAL GROSS AREA	PCT OF BASE	YEAR	TOT ADJ AREA	SUBAREA MARKET VALUE
BAS	1,549	100	1993	1,549	105,069
FBM	1,334	80	1993	1,067	72,375
FCP	338	25	1993	84	5,698
FOP	96	30	1993	29	1,967
UOP	63	20	1998	13	882
USP	210	30	1998	63	4,273
TOTALS	3,590			2,805	190,264

MARKET ADJUSTMENTS

TYPE	MDL	EFF. AREA	TOT ADJ PTS	EFF. BASE RATE	REPL. COST NEW	AYB	EYB	ECON	FNCT		NORM	% COND
0100	01	2,805	90.1440	90.14	252,843	1964	1975	0	0	0	24.75	75.25

1 SINGLE FAM – 100% - 0 Heated Area: 2616 HX Base Yr

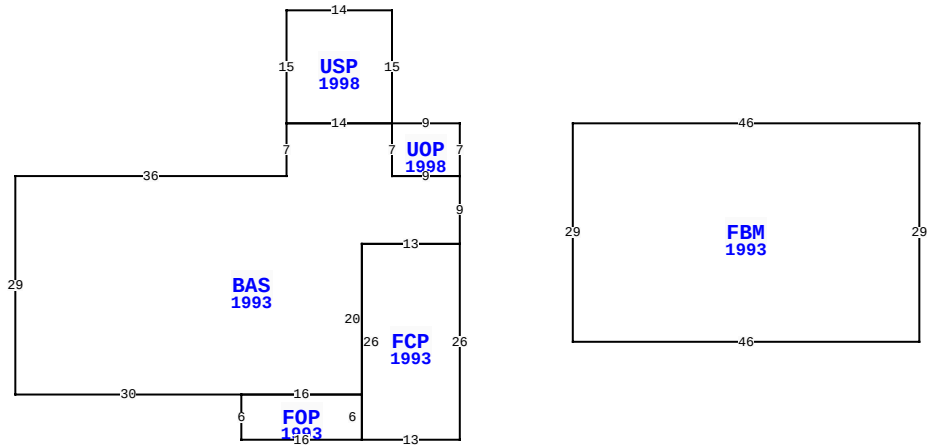

711 S 14TH ST, FERNANDINA BEACH

BLD DATE		LGL DATE	
XF DATE		LAND DATE	03/18/2024 MLU
INC DATE		AG DATE	

VALUATION SUMMARY

VALUATION BY		STANDARD
Tax Group: 2	Tax Dist:	
BUILDING MARKET VALUE		190,264
TOTAL MARKET OB/XF VALUE		2,541
TOTAL LAND VALUE - MARKET		158,400
TOTAL MARKET VALUE		351,205
SOH/AGL Deduction		239,487
ASSESSED VALUE		111,718
TOTAL EXEMPTION VALUE	HX HB WX SX	105,722
BASE TAXABLE VALUE		5,996
TOTAL JUST VALUE		351,205
NCON VALUE		0
INCOME VALUE		
PREVIOUS YEAR MKT VALUE		343,545

PERMIT NUM	DESCRIPTION	AMT	ISSUED
20080154	GAS	750	02/04/2008
20041832	REPAIR/RRF	3,000	10/11/2004

SALES DATA

OFF RECORD Number	DATE	TYPE INST	Q / U	V / I	RSN CD	SALE PRICE

BUILDING NOTES

BUILDING DIMENSIONS

UOP=[YR=1998] W9 USP=[YR=1998] N15 W14 S15 BAS=[YR=1993] S7 W36 S29 E30 FOP=[YR=1993] S6 E16 FCP=[YR=1993] E13 N26 W13 S26 $ N6 W16 $ E16 N20 E13 N9 W9 N7 W14 $ E14 $ S7 E9 N7 $ PTR= E15 FBM=[YR=1993] E46 S29 W46 N29 $ W15 $.

EXTRA FEATURES

LN	OB/XF CODE	DESCRIPTION	BLD	CAP	L	W	UNITS	UT	Adj R	ADJ UNIT PRICE	ORIG COND	YEAR ON	YEAR ACTUAL	Q	% COND	OB/XF MKT VALUE	NOTES
1	0810	CONCRETE A	0	100	9	88	792.00	SF	6.50	6.50	100	1964	1964	3	20	1,030	
2	0500	FP-PRE FAB	0	100	0	0	1.00	UT	3,500.00	3,500.00	100	1964	1964	3	25	875	
3	0819	CONC 12"	0	100	4	2	8.00	SF	9.50	9.50	100	1986	1986	3	47	36	
4	0940	SHEDS/PORT	0	100	10	10	100.00	SF	30.00	30.00	100	1980	1980	3	20	600	

LAND DESCRIPTION

TOTAL OB/XF 2,541

LN	USE CODE	CLS	LAND USE DESCRIPTION	CAP	RD	LOC ZONE	FRONT	DEPTH	TOT LND UTS	UNIT TYPE	DT	DPTH FACT	% COND	TOT ADJ	UNIT PRICE	ADJ UNIT PRICE	LAND VALUE	OTHER ADJUSTMENTS AND NOTES	YEAR	DENSITY	DECL	FRZ	YR	CONSRV
1	000100	C	RES	100		R-2	72.00	200.00	72.00	FF		1.00	1.00	1.00	2,200.00	2,200.00	158,400							

REVIEW DATE 05/31/2019 BY DJA Total Acres: 0.00 Total Land Value: 158,400 Market: 0 Agricultural: 0 Common: 158,400 PRINTED 07/30/2025 BY SYS