BLK 224 PT LOT 6 LYING NELY OF
IN OR 2574/684
14TH ST EXT & W1/2 OF ABND

SCHUTT STEPHEN M REV TRUST/SCHUTT STEPHEN M TRUSTE
1330 N 14TH ST
FERNANDINA BEACH, FL 32034

2025

00-00-31-1800-0224-0060

BUILDING CHARACTERISTICS

ELEMENT	CD	CONSTRUCTION
Exterior Wall	17	CB STUCCO 50
Exterior Wall	31	HARDIE BRD 50
Roof Structur	03	GABLE/HIP 100
Roof Cover	13	STAND SEAM 100
Interior Wall	05	DRYWALL 100
Interior Floo	11	CLAY TILE 100
Air Condition	03	CENTRAL 100
Heating Type	04	AIR DUCTED 100
Bedrooms		2 100
Bathrooms		2 100
Frame	02	WOOD FRAME 50
Frame	03	MASONRY 50
Stories	2.	2. 100
Quality	06	Quality Level 06
DOR CODE	0100	SINGLE FAMILY
MAP NUM		MKT AREA 01
NEIGHBORHOOD/LOC	1007.00	

AREA TYPE	TOTAL GROSS AREA	PCT OF BASE	YEAR	TOT ADJ AREA	SUBAREA MARKET VALUE
BAS	90	100	2025	90	19,059
FGR	1,671	55	2025	919	194,617
FOP	1,347	30	2025	404	85,555
FST	45	55	2025	25	5,294
FST	48	55	2025	26	5,506
FUS	1,769	100	2025	1,769	374,621
STR	85	10	2025	8	1,694
UOP	1,347	20	2025	269	56,966
TOTALS	6,402			3,510	743,313

MARKET ADJUSTMENTS

TYPE	MDL	EFF. AREA	TOT ADJ PTS	EFF. BASE RATE	REPL. COST NEW	AYB	EYB	ECON	FNCT		NORM	% COND
0500	01	3,510	134.0325	211.77	743,313	2024	2024	0	0	0	0.00	100.00

1 SFR CUST – 100% - 2025 Heated Area: 1859 HX Base Yr 2025

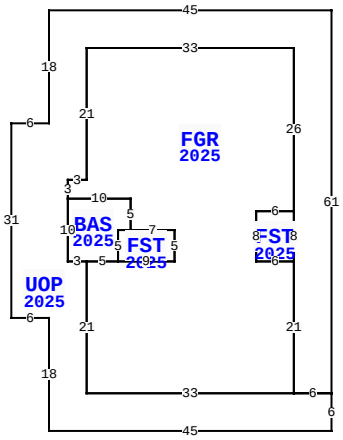

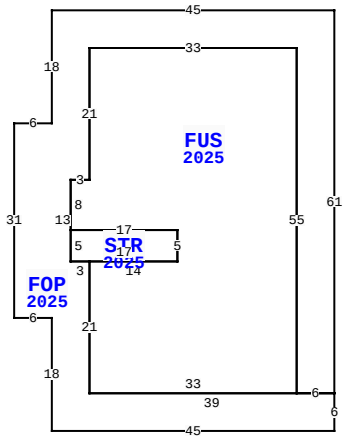

1330 N 14TH ST, FERNANDINA BEACH

BLD DATE		LGL DATE	
XF DATE		LAND DATE	05/08/2025 MLU
INC DATE		AG DATE	

NASSAU COUNTY PROPERTY

PAGE 1 of 1 2

VALUATION SUMMARY

VALUATION BY		STANDARD
Tax Group: 2	Tax Dist:	
BUILDING MARKET VALUE		743,313
TOTAL MARKET OB/XF VALUE		31,000
TOTAL LAND VALUE - MARKET		180,000
TOTAL MARKET VALUE		954,313
SOH/AGL Deduction		361,207
ASSESSED VALUE		593,106
TOTAL EXEMPTION VALUE	HX HB	50,722
BASE TAXABLE VALUE		542,384
TOTAL JUST VALUE		954,313
NCON VALUE		774,313
INCOME VALUE		
PREVIOUS YEAR MKT VALUE		150,000

PERMIT NUM	DESCRIPTION	AMT	ISSUED
2023-0172	6396T 1981B	535,321	04/28/2023
20220115	DEMOLITION	0	11/18/2022
20091268	ELEC OTHER	250	09/18/2009
20091208	OTHER	2,300	09/10/2009

SALES DATA

OFF RECORD Number	DATE	TYPE INST	Q / U	V / I	RSN CD	SALE PRICE
2574/0684	6/29/2022	WD	Q	I	02	439,900
GRANTOR: HYERS ROBERT DENNIS &						
GRANTEE: SCHUTT STEPHEN M RE						
2481/0386	7/16/2021	QC	U	I	11	100
GRANTOR: HYERS OLA M						
GRANTEE: TODD SHEILA L & ROB						

BUILDING NOTES

EXTRA FEATURES

LN	OB/XF CODE	DESCRIPTION	BLD	CAP	L	W	UNITS	UT	Adj R	ADJ UNIT PRICE	ORIG COND	YEAR ON	YEAR ACTUAL	Q	% COND	OB/XF MKT VALUE	NOTES
1	0855	CONC PAVER	0	100	0	0	3,100.00	SF	10.00	10.00	100	2025	2024		100	31,000	

BUILDING DIMENSIONS

FGR=[YR=2025;ORIG=80,10] S26 W6 S8 E6 S21 W33 N21 E5 E9 N5 W7 N5 W10 N3 E3 N21 E33 $
FST=[YR=2025;ORIG=74,36] E6 S8 W6 N8 $
FST=[YR=2025;ORIG=52,39] E2 E7 S5 W9 N5 $
BAS=[YR=2025;ORIG=54,39] N5 W10 S10 E3 E5 N5 E2 $
UOP=[YR=2025;ORIG=86,71] W45 N18 W6 N31 E6 N18 E45 S61 W6 N21 N8 N26 W33 S21 W3 S3 S10 E3 S21 E33 E6 S6 $
FUS=[YR=2025;ORIG=140,10] E33 S55 W33 N21 E14 N5 W17 N8 E3 N21 $
STR=[YR=2025;ORIG=137,39] E17 S5 W17 N5 $
FOP=[YR=2025;ORIG=173,65] E6 N61 W45 S18 W6 S31 E6 S18 E45 N6 W39 N21 W3 N13 E3 N21 E33 S55 $

LAND DESCRIPTION

TOTAL OB/XF 31,000

LN	USE CODE	CLS	LAND USE DESCRIPTION	CAP	RD	LOC ZONE	FRONT	DEPTH	TOT LND UTS	UNIT TYPE	DT	DPTH FACT	% COND	TOT ADJ	UNIT PRICE	ADJ UNIT PRICE	LAND VALUE	OTHER ADJUSTMENTS AND NOTES	YEAR	DENSITY	DECL	FRZ	YR	CONSRV
1	000100	C	RES	100		R-1	172.00	150.00	1.00	LT		1.00	1.00	1.00	180,000.00	180,000.00	180,000							

REVIEW DATE 02/21/2025 BY HS Total Acres: 0.00 Total Land Value: 180,000 Market: 0 Agricultural: 0 Common: 180,000 PRINTED 07/30/2025 BY SYS