BLK 201 LOT 4
OR 166 PG 433
CITY OF FDNA BEACH

HOOPER SEIBERT T JR EST
C/O WENDY HOOPER, 95396 SANTA JUANA RD
FERNANDINA BEACH, FL 32034

2025

00-00-31-1800-0201-0040

NASSAU COUNTY PROPERTY

BUILDING CHARACTERISTICS

ELEMENT	CD	CONSTRUCTION
Exterior Wall	15	CONC BLOCK 70
Exterior Wall	05	AVERAGE 30
Roof Structur	03	GABLE/HIP 100
Roof Cover	03	COMP SHNGL 100
Interior Wall	05	DRYWALL 80
Interior Wall	02	WALL BD/WD 20
Interior Floo	14	CARPET 80
Interior Floo	08	SHT VINYL 20
Air Condition	03	CENTRAL 100
Heating Type	04	AIR DUCTED 100
Bedrooms		4 100
Bathrooms		2 100
Frame	03	MASONRY 100
Stories	1.5	1.5 100
Units		0 100
BUD8 Adjustme	05	DIST 1A 100
Occupancy	00	NONE 100
Quality	03	Quality Level 03

DOR CODE	0100	SINGLE FAMILY	
MAP NUM		MKT AREA	02
NEIGHBORHOOD/LOC	2017.00		

AREA TYPE	TOTAL GROSS AREA	PCT OF BASE	YEAR	TOT ADJ AREA	SUBAREA MARKET VALUE
BAS	1,659	100	1993	1,659	109,459
FST	364	55	2013	200	13,196
FUS	589	100	1993	589	38,862
TOTALS	2,612			2,448	161,516

MARKET ADJUSTMENTS

TYPE	MDL	EFF. AREA	TOT ADJ PTS	EFF. BASE RATE	REPL. COST NEW	AYB	EYB	ECON	FNCT		NORM	% COND
0100	01	2,448	94.7660	94.77	231,997	1963	1963	0	0	0	30.38	69.62

1 SINGLE FAM – 0% - 0 Heated Area: 2248 HX Base Yr

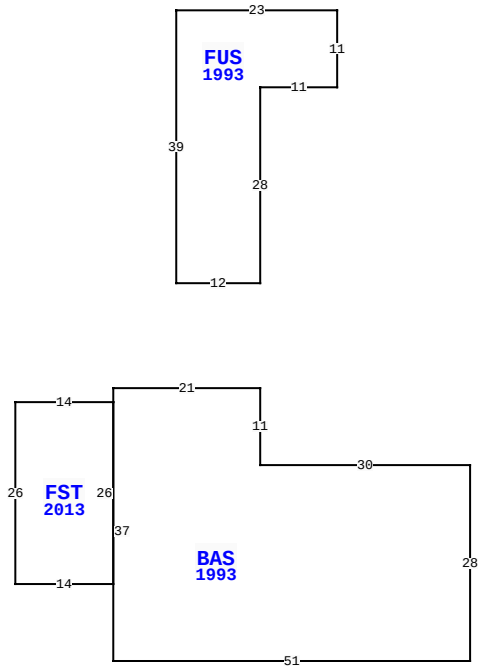

1482 S 5TH ST, FERNANDINA BEACH

BLD DATE		LGL DATE	
XF DATE		LAND DATE	05/06/2025 MLU
INC DATE		AG DATE	

VALUATION SUMMARY

VALUATION BY	STANDARD
Tax Group: 8	Tax Dist:
BUILDING MARKET VALUE	161,516
TOTAL MARKET OB/XF VALUE	2,488
TOTAL LAND VALUE - MARKET	104,000
TOTAL MARKET VALUE	268,004
SOH/AGL Deduction	37,605
ASSESSED VALUE	230,399
TOTAL EXEMPTION VALUE	0
BASE TAXABLE VALUE	230,399
TOTAL JUST VALUE	268,004
NCON VALUE	0
INCOME VALUE	
PREVIOUS YEAR MKT VALUE	237,300

PERMIT NUM	DESCRIPTION	AMT	ISSUED
20110655	H/AC	4,500	04/28/2011

SALES DATA

OFF RECORD Number	DATE	TYPE INST	Q U	V I	RSN CD	SALE PRICE
0166/0433	1/01/1974	WD	U	I		100

GRANTOR:

GRANTEE:

BUILDING NOTES

BUILDING DIMENSIONS

BAS=[YR=1993] W21 S2 FST=[YR=2013] W14 S26 E14 N26$ S37 E51 N28 W30 N11 $ PTR= N15 FUS=[YR=1993] N28 E11 N11 W23 S39 E12 $ S15 $.

EXTRA FEATURES

LN	OB/XF CODE	DESCRIPTION	BLD	CAP	L	W	UNITS	UT	Adj R	ADJ UNIT PRICE	ORIG COND	YEAR ON	YEAR ACTUAL	Q	% COND	OB/XF MKT VALUE	NOTES
1	0810	CONCRETE A	0	0	0	0	806.00	SF	6.50	6.50	100	1970	1970	3	20	1,048	
2	0940	SHEDS/PORT	0	0	20	12	240.00	SF	30.00	30.00	100	1993	1993	3	20	1,440	

LAND DESCRIPTION

TOTAL OB/XF 2,488

LN	USE CODE	CLS	LAND USE DESCRIPTION	CAP	RD	LOC ZONE	FRONT	DEPTH	TOT LND UTS	UNIT TYPE	DT	DPTH FACT	% COND	TOT ADJ	UNIT PRICE	ADJ UNIT PRICE	LAND VALUE	OTHER ADJUSTMENTS AND NOTES	YEAR	DENSITY	DECL	FRZ	YR	CONSRV
1	000100	C	RES	0		RSF-	2100.00	100.00	100.00	FF		1.00	1.00	0.80	1,300.00	1,040.00	104,000							

REVIEW DATE 05/12/2019 BY KBA Total Acres: 0.00 Total Land Value: 104,000 Market: 0 Agricultural: 0 Common: 104,000 PRINTED 07/30/2025 BY SYS