ALL OF BLOCKS 197 & 235 & PT
OF BLOCK 211 IN OR 2568/1843 &
PT ABDN R/W PT OR 566/535-38

SREIT VINTAGE AMELIA LLC
C/O STARWOOD CAPITAL GROUP, 591 WEST PUTNAM AVE
GREENWICH, CT 06830

2025

00-00-31-1800-0197-0000

NASSAU COUNTY PROPERTY

BUILDING CHARACTERISTICS

ELEMENT	CD	CONSTRUCTION
Exterior Wall	10	ABOVE AVG 100
Roof Structur	04	WOOD TRUSS 100
Roof Cover	03	COMP SHNGL 100
Interior Wall	05	DRYWALL 100
Interior Floo	11	CLAY TILE 70
Interior Floo	14	CARPET 30
Ceiling	02	F.NOT SUS 100
Air Condition	03	CENTRAL 100
Heating Type	04	AIR DUCTED 100
Fixtures		19 100
Frame	02	WOOD FRAME 100
Story Height		11 100
RMS		6 100
Stories	1.	1. 100
Units		0 100
Occupancy	00	NONE 100
Quality	04	Quality Level 04
DOR CODE	0300	MULTI-FAMILY
MAP NUM		MKT AREA 01
NEIGHBORHOOD/LOC	2002.00	

AREA TYPE	TOTAL GROSS AREA	PCT OF BASE	YEAR	TOT ADJ AREA	SUBAREA MARKET VALUE
BAS	5,240	100	2019	5,240	728,274
CAN	50	30	2019	15	2,084
CAN	56	30	2019	17	2,363
CAN	358	30	2019	107	14,872
CAN	1,423	30	2019	427	59,346
FST	42	50	2019	21	2,918
TOTALS	7,169			5,827	809,857

MARKET ADJUSTMENTS

TYPE	MDL	EFF. AREA	TOT ADJ PTS	EFF. BASE RATE	REPL. COST NEW	AYB	EYB	ECON	FNCT		NORM	% COND
0303	04	5,827	130.1092	141.82	826,385	2019	2019	0	0	0	2.00	98.00

1 CLUB HOUSE – 0% - 2023 Heated Area: 5240 HX Base Yr

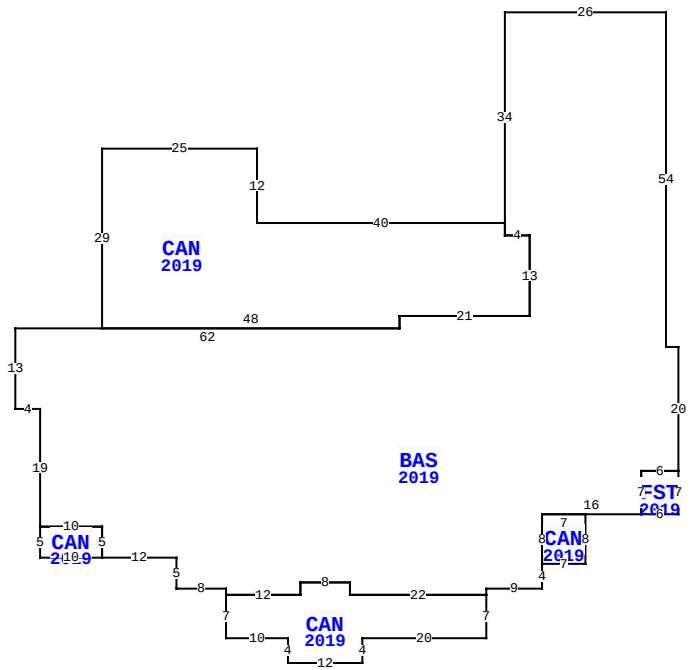

BLD DATE	03/04/2025 KW	LGL DATE	
XF DATE	03/04/2025 KW	LAND DATE	04/23/2025 DC
INC DATE		AG DATE	

2 VINTAGE WAY, FERNANDINA BEACH

EXTRA FEATURES

LN	OB/XF CODE	DESCRIPTION	BLD	CAP	L	W	UNITS	UT	Adj R	ADJ UNIT PRICE	ORIG COND	YEAR ON	YEAR ACTUAL	Q	% COND	OB/XF MKT VALUE	NOTES
1	0803	ASPHALT C	1	0	0	0	9,244.00	SF	2.00	2.00	100	2019	2019	3	82	15,160	
2	0812	CONCRETE C	1	0	0	0	1,941.00	SF	4.00	4.00	100	2019	2019	3	97	7,531	
3	0855	CONC PAVER	1	0	10	8	80.00	SF	10.00	10.00	100	2019	2019	3	97	776	
4	0400	CONC CURB	1	0	0	0	256.00	LF	15.00	15.00	100	2019	2019	3	98	3,763	
5	0972	ST LGHT UN	1	0	0	0	3.00	UT	2,530.00	2,530.00	100	2019	2019	3	94	7,135	
6	0504	FP-ELECTRI	1	0	0	0	1.00	UT	10,000.00	10,000.00	100	2019	2019	3	98	9,800	
7	0861	POOL GUNIT	1	0	0	0	2,385.00	SF	85.00	85.00	100	2019	2019	3	87	176,371	
8	0812	CONCRETE C	1	0	0	0	5,933.00	SF	4.00	4.00	100	2019	2019	3	97	23,020	
9	0855	CONC PAVER	1	0	0	0	227.00	SF	10.00	10.00	100	2019	2019	3	97	2,202	
10	0462	ST/AL FNC	1	0	0	0	1,404.00	SF	10.00	10.00	100	2019	2019	3	87	12,215	

VALUATION SUMMARY

VALUATION BY	DIRECT_CAP
Tax Group: 2	Tax Dist:
BUILDING MARKET VALUE	48,171,155
TOTAL MARKET OB/XF VALUE	0
TOTAL LAND VALUE - MARKET	0
TOTAL MARKET VALUE	48,171,155
SOH/AGL Deduction	0
ASSESSED VALUE	48,171,155
TOTAL EXEMPTION VALUE	0
BASE TAXABLE VALUE	48,171,155
TOTAL JUST VALUE	48,171,155
NCON VALUE	0
INCOME VALUE	48,171,155
PREVIOUS YEAR MKT VALUE	47,922,312

VINTAGE APARTMENTS- AMELIA ISLAND

PERMIT NUM	DESCRIPTION	AMT	ISSUED
20190050	SWIM POOL	205,665	06/04/2019
20181334	NEW CONSTR-BLDG 4	2,635,729	04/20/2018
20181335	NEW CONSTR-BLDG 5	2,635,729	04/20/2018
20181336	NEW CONSTR-BLDG 6	2,635,729	04/20/2018
20181337	NEW CONSTR-BLDG 7	2,710,879	04/20/2018
20181338	NEW CONSTR-BLDG 8	2,710,879	04/20/2018

SALES DATA

OFF RECORD Number	DATE	TYPE INST	Q U	V I	RSN CD	SALE PRICE
2568/1843	6/08/2022	SW	Q	I	01	66,933,000
GRANTOR: VINTAGE AMELIA OWNER						
GRANTEE: SREIT VINTAGE AMELI						
2200/0197	5/31/2018	SW	U	V	30	3,000,000
GRANTOR: TDK LAND LLC						
GRANTEE: VINTAGE AMELIA OWNE						

BUILDING NOTES

BUILDING DIMENSIONS

BAS=[YR=2019] W26 S34 CAN=[YR=2019] W40 N12 W25 S29 E48 N2 E21 N13 W4 N2$ S2 E4 S13 W21 S2 W62 S13 E4 S19 CAN=[YR=2019] S5 E10 N5 W10$ E10 S5 E12 S5 E8 S1 CAN=[YR=2019] S7 E10 S4 E12 N4 E20 N7 W22 N2 W8 S2 W12$ E12 N2 E8 S2 E22 N1 E9 N4 CAN=[YR=2019] E7 N8 W7 S8$ N8 E16 FST=[YR=2019] E6 N7 W6 S7$ N7 E6 N20 W2 N54$.

LAND DESCRIPTION

TOTAL OB/XF 257,973

LN	USE CODE	CLS	LAND USE DESCRIPTION	CAP	RD	LOC ZONE	FRONT	DEPTH	TOT LND UTS	UNIT TYPE	DT	DPTH FACT	% COND	TOT ADJ	UNIT PRICE	ADJ UNIT PRICE	LAND VALUE	OTHER ADJUSTMENTS AND NOTES	YEAR	DENSITY	DECL	FRZ	YR	CONSRV
1	000300	C	MULTI-FAMILY	0	0003	R-3	0.00	0.00	224.00	UT		1.00	1.00	1.00	21,000.00	21,000.00	4,704,000							

REVIEW DATE 03/04/2025 BY KW Total Acres: 0.00 Total Land Value: 0 Market: 0 Agricultural: 0 Common: 0 PRINTED 07/30/2025 BY SYS

ALL OF BLOCKS 197 & 235 & PT
OF BLOCK 211 IN OR 2568/1843 &
PT ABDN R/W PT OR 566/535-38

SREIT VINTAGE AMELIA LLC
C/O STARWOOD CAPITAL GROUP, 591 WEST PUTNAM AVE
GREENWICH, CT 06830

2025

00-00-31-1800-0197-0000

NASSAU COUNTY PROPERTY

BUILDING CHARACTERISTICS

ELEMENT	CD	CONSTRUCTION
Exterior Wall	10	ABOVE AVG 100
Roof Structur	04	WOOD TRUSS 100
Roof Cover	03	COMP SHNGL 100
Interior Wall	05	DRYWALL 100
Interior Floo	13	LVT/LAMNT 70
Interior Floo	14	CARPET 30
Air Condition	03	CENTRAL 100
Heating Type	04	AIR DUCTED 100
Bedrooms		2 100
Bathrooms		2 100
Frame	02	WOOD FRAME 100
Story Height		10 100
RMS		0 100
Units		24 100
Quality	04	Quality Level 04

DOR CODE 0300 MULTI-FAMILY

MAP NUM | MKT AREA 01

NEIGHBORHOOD/LOC 2002.00

AREA TYPE	TOTAL GROSS AREA	PCT OF BASE	YEAR	TOT ADJ AREA	SUBAREA MARKET VALUE
BAS	2,359	100	2019	2,359	438,829
BAS	2,359	100	2019	2,359	438,829
BAS	3,126	100	2019	3,126	581,509
CAN	362	30	2019	109	20,276
CAN	362	30	2019	109	20,276
CAN	466	30	2019	140	26,044
CAN	466	30	2019	140	26,044
CAN	630	30	2019	189	35,158
CAN	630	30	2023	189	35,158
FOP	84	30	2019	25	4,651
TOTALS	28,162			25,216	4,690,771

MARKET ADJUSTMENTS

TYPE	MDL	EFF. AREA	TOT ADJ PTS	EFF. BASE RATE	REPL. COST NEW	AYB	EYB	ECON	FNCT		NORM	% COND
0302	03	25,216	109.7250	189.82	4,786,501	2019	2019	0	0	0	2.00	98.00

2 APART/LUX – 0% - 2023 Heated Area: 23532 HX Base Yr

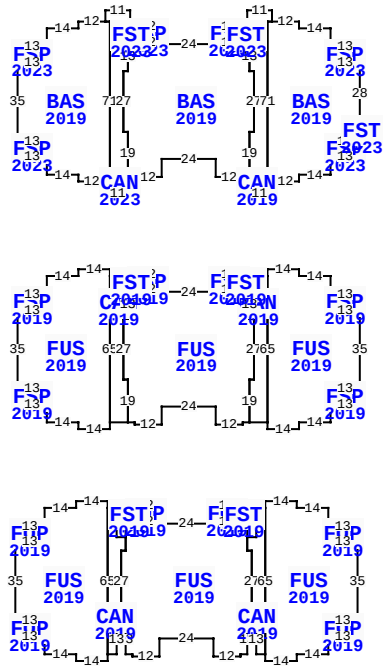

** This building has 40 Sub-Areas

2 VINTAGE WAY, FERNANDINA BEACH

BLD DATE	03/04/2025	KW	LGL DATE		
XF DATE	03/04/2025	KW	LAND DATE	04/23/2025	DC
INC DATE			AG DATE		

NASSAU COUNTY PROPERTY — VALUATION SUMMARY

VALUATION BY	DIRECT_CAP
Tax Group: 2	Tax Dist:
BUILDING MARKET VALUE	48,171,155
TOTAL MARKET OB/XF VALUE	0
TOTAL LAND VALUE - MARKET	0
TOTAL MARKET VALUE	48,171,155
SOH/AGL Deduction	0
ASSESSED VALUE	48,171,155
TOTAL EXEMPTION VALUE	0
BASE TAXABLE VALUE	48,171,155
TOTAL JUST VALUE	48,171,155
NCON VALUE	0
INCOME VALUE	48,171,155
PREVIOUS YEAR MKT VALUE	47,922,312

PERMIT NUM	DESCRIPTION	AMT	ISSUED
20181339	NEW CONSTR-BLDG 9	2,635,729	04/20/2018
20181340	NEW CONSTR-MAINT	38,383	04/20/2018
20181343	NEW CONSTR-BLDG C	365,671	04/20/2018
20181345	NEW CONSTR-BLDG C	365,671	04/20/2018
20181346	NEW CONSTR-BLDG C	365,671	04/20/2018
20181347	NEW CONSTR-BLDG C	365,671	04/20/2018

SALES DATA

OFF RECORD Number	DATE	TYPE INST	Q / U	V / I	RSN CD	SALE PRICE
2568/1843	6/08/2022	SW	Q	I	01	66,933,000
GRANTOR: VINTAGE AMELIA OWNER						
GRANTEE: SREIT VINTAGE AMELI						
2200/0197	5/31/2018	SW	U	V	30	3,000,000
GRANTOR: TDK LAND LLC						
GRANTEE: VINTAGE AMELIA OWNE						

BUILDING NOTES

EXTRA FEATURES

LN	OB/XF CODE	DESCRIPTION	BLD	CAP	L	W	UNITS	UT	Adj R	ADJ UNIT PRICE	ORIG COND	YEAR ON	YEAR ACTUAL	Q	% COND	OB/XF MKT VALUE	NOTES
11	0649	LIGHTS-GD	1	0	0	0	19.00	SF	225.00	225.00	100	2019	2019	3	82	3,506	
12	0648	LIGHTS-AV	1	0	0	0	13.00	UT	140.00	140.00	100	2019	2019	3	82	1,492	
13	1075	TRELLIS G	1	0	16	12	192.00	SF	35.00	35.00	100	2019	2019	3	87	5,846	
14	1075	TRELLIS G	1	0	21	6	126.00	SF	35.00	35.00	100	2019	2019	3	87	3,837	
15	1075	TRELLIS G	1	0	21	6	126.00	SF	35.00	35.00	100	2019	2019	3	87	3,837	
16	0600	SUMMER KIT	1	0	0	0	1.00	UT	5,000.00	5,000.00	100	2019	2019	3	82	4,100	
17	0142	BAR TOP A	1	0	0	0	14.00	LF	165.00	165.00	100	2019	2019	3	82	1,894	
18	0504	FP-ELECTRI	1	0	0	0	1.00	UT	2,000.00	2,000.00	100	2019	2019	3	98	1,960	
19	0803	ASPHALT C	0	0	0	0	6,320.00	SF	2.00	2.00	100	2019	2019	3	82	10,365	
20	0972	ST LGHT UN	0	0	0	0	2.00	UT	2,530.00	2,530.00	100	2019	2019	3	94	4,756	

TOTAL OB/XF 41,593

BUILDING DIMENSIONS

BAS=[YR=2019;LABEL=UNITS211-218_1st FLR;ORIG=-39,1] W3 W12 S1 W24 N1 W12 W3 S13 W2 S27 E2 S19 E1 E2 S1 E12 N8 E24 S8 E12 N1 E2 E1 N19 E2 N27 W2 N13 $
FUS=[YR=2019;LABEL=UNITS221-228_2nd FLR;ORIG=-39,111] W3 W12 S1 W24 N1 W12 W3 S13 W2 S27 E2 S19 E3 S1 E12 N8 E24 S8 E12 N1 E3 N19 E2 N27 W2 N13 $
FUS=[YR=2019;LABEL=UNITS231-238_3rd FLR;ORIG=-38,227] W2 N6 N7 W3 W12 S1 W24 N1 W12 W3 S7 S6 W2 S27 E2 S6 S13 E3 S1 E12 N8 E24 S8 E12 N1 E3 N13 N6 E2 N27 $
BAS=[YR=2019;ORIG=10,10] W13 N7 N8 W14 N3 W12 W2 S71 E2 E12 N3 E14 N8 N7 E13 N2 N5 N28 $
BAS=[YR=2019;ORIG=-101,-8] W2 W12 S3 W14 S8 S7 W13 S35 E13 S7

LAND DESCRIPTION

LN	USE CODE	CLS	LAND USE DESCRIPTION	CAP	RD	LOC ZONE	FRONT	DEPTH	TOT LND UTS	UNIT TYPE	DT	DPTH FACT	% COND	TOT ADJ	UNIT PRICE	ADJ UNIT PRICE	LAND VALUE	OTHER ADJUSTMENTS AND NOTES	YEAR	DENSITY	DECL	FRZ	YR	CONSRV

REVIEW DATE 03/04/2025 BY KW Total Acres: 0.00 Total Land Value: 0 Market: 0 Agricultural: 0 Common: 0 PRINTED 07/30/2025 BY SYS

ALL OF BLOCKS 197 & 235 & PT
OF BLOCK 211 IN OR 2568/1843 &
PT ABDN R/W PT OR 566/535-38

SREIT VINTAGE AMELIA LLC
C/O STARWOOD CAPITAL GROUP, 591 WEST PUTNAM AVE
GREENWICH, CT 06830

2025

00-00-31-1800-0197-0000

NASSAU COUNTY PROPERTY

BUILDING CHARACTERISTICS

ELEMENT	CD	CONSTRUCTION
Exterior Wall	10	ABOVE AVG 100
Roof Structur	04	WOOD TRUSS 100
Roof Cover	03	COMP SHNGL 100
Interior Wall	05	DRYWALL 100
Interior Floo	13	LVT/LAMNT 70
Interior Floo	14	CARPET 30
Air Condition	03	CENTRAL 100
Heating Type	04	AIR DUCTED 100
Bedrooms		2 100
Bathrooms		2 100
Frame	02	WOOD FRAME 100
Story Height		10 100
RMS		0 100
Units		2 100
Quality	04	Quality Level 04

DOR CODE	0300	MULTI-FAMILY	
MAP NUM		MKT AREA	01
NEIGHBORHOOD/LOC	2002.00		

AREA TYPE	TOTAL GROSS AREA	PCT OF BASE	YEAR	TOT ADJ AREA	SUBAREA MARKET VALUE
BAS	92	100	2019	92	18,556
BAS	92	100	2019	92	18,556
CAN	45	30	2019	14	2,823
CAN	45	30	2019	14	2,823
FGR	1,760	55	2019	968	195,240
FSP	99	55	2019	54	10,892
FSP	99	55	2019	54	10,892
FST	45	55	2019	25	5,042
FST	473	55	2019	260	52,441
FUS	1,105	100	2019	1,105	222,872
TOTALS	4,960			3,783	763,007

MARKET ADJUSTMENTS

TYPE	MDL	EFF. AREA	TOT ADJ PTS	EFF. BASE RATE	REPL. COST NEW	AYB	EYB	ECON	FNCT		NORM	% COND
0302	03	3,783	118.9650	205.81	778,579	2019	2019	0	0	0	2.00	98.00

3 APART/LUX – 0% - 2023 Heated Area: 2394 HX Base Yr

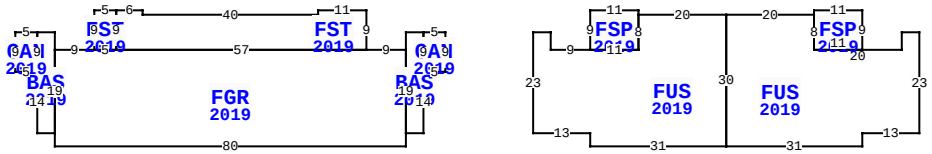

** This building has 11 Sub-Areas

2 VINTAGE WAY, FERNANDINA BEACH

BLD DATE	03/04/2025	KW	LGL DATE	
XF DATE	03/04/2025	KW	LAND DATE	04/23/2025 DC
INC DATE			AG DATE	

VALUATION SUMMARY

VALUATION BY	DIRECT_CAP
Tax Group: 2	Tax Dist:
BUILDING MARKET VALUE	48,171,155
TOTAL MARKET OB/XF VALUE	0
TOTAL LAND VALUE - MARKET	0
TOTAL MARKET VALUE	48,171,155
SOH/AGL Deduction	0
ASSESSED VALUE	48,171,155
TOTAL EXEMPTION VALUE	0
BASE TAXABLE VALUE	48,171,155
TOTAL JUST VALUE	48,171,155
NCON VALUE	0
INCOME VALUE	48,171,155
PREVIOUS YEAR MKT VALUE	47,922,312

PERMIT NUM	DESCRIPTION	AMT	ISSUED
20181356	OTHER-TREES & FIL	1,918,012	04/20/2018
20181323	NEW CONSTR-CLUBHO	713,708	04/20/2018
20181326	NEW CONSTR-BLDG 1	3,414,822	04/20/2018
20181331	NEW CONSTR-BLDG 2	2,710,879	04/20/2018
20181332	NEW CONSTR-BLDG 3	2,710,879	04/20/2018

SALES DATA

OFF RECORD Number	DATE	TYPE INST	Q / U	V / I	RSN CD	SALE PRICE
2568/1843	6/08/2022	SW	Q	I	01	66,933,000
GRANTOR: VINTAGE AMELIA OWNER						
GRANTEE: SREIT VINTAGE AMELI						
2200/0197	5/31/2018	SW	U	V	30	3,000,000
GRANTOR: TDK LAND LLC						
GRANTEE: VINTAGE AMELIA OWNE						

BUILDING NOTES

BUILDING DIMENSIONS

FGR=[YR=2019;ORIG=-9,4] W9 W57 W5 W9 S19 S3 E80 N3 N19 $
FUS=[YR=2019;ORIG=20,0] E4 S4 E9 E11 N8 E20 S30 W31 N3 W13 N23 $
FUS=[YR=2019;ORIG=64,-4] E20 S8 E20 N4 E4 S23 W13 S3 W31 N30 $
FST=[YR=2019;ORIG=-18,4] N9 W11 S1 W40 N1 W6 S9 E57 $
FSP=[YR=2019;ORIG=33,4] N9 E11 S1 S8 W11 $
FSP=[YR=2019;ORIG=84,-4] N1 E11 S9 W11 N8 $
BAS=[YR=2019;ORIG=-5,0] W4 S4 S19 E4 N14 N9 $
BAS=[YR=2019;ORIG=-89,4] N4 W4 S9 S14 E4 N19 $
CAN=[YR=2019;ORIG=0,0] W5 S9 E5 N9 $
FST=[YR=2019;ORIG=-75,-5] W5 S9 E5 N9 $

EXTRA FEATURES

LN	OB/XF CODE	DESCRIPTION	BLD	CAP	L	W	UNITS	UT	Adj R	ADJ UNIT PRICE	ORIG COND	YEAR ON	YEAR ACTUAL	Q	% COND	OB/XF MKT VALUE	NOTES
21	0810	CONCRETE A	0	0	25	17	425.00	SF	6.50	6.50	100	2019	2019	3	97	2,680	
22	0812	CONCRETE C	0	0	0	0	2,364.00	SF	4.00	4.00	100	2019	2019	3	97	9,172	
23	0856	POROUS CC	0	0	0	0	7,069.00	SF	2.50	2.50	100	2019	2019	3	97	17,142	
24	0400	CONC CURB	0	0	0	0	260.00	LF	15.00	15.00	100	2019	2019	3	98	3,822	
25	0462	ST/AL FNC	0	0	88	6	528.00	SF	10.00	10.00	100	2019	2019	3	87	4,594	
26	0812	CONCRETE C	0	0	0	0	6,141.00	SF	4.00	4.00	100	2019	2019	3	97	23,827	
27	0856	POROUS CC	0	0	0	0	13,634.00	SF	2.50	2.50	100	2019	2019	3	97	33,062	
28	0400	CONC CURB	0	0	0	0	1,103.00	LF	15.00	15.00	100	2019	2019	3	98	16,214	
29	0810	CONCRETE A	0	0	20	16	320.00	SF	6.50	6.50	100	2019	2019	3	97	2,018	
30	0812	CONCRETE C	0	0	0	0	6,141.00	SF	4.00	4.00	100	2019	2019	3	97	23,827	

TOTAL OB/XF 136,358

LAND DESCRIPTION

LN	USE CODE	CLS	LAND USE DESCRIPTION	CAP	RD	LOC ZONE	FRONT	DEPTH	TOT LND UTS	UNIT TYPE	DT	DPTH FACT	% COND	TOT ADJ	UNIT PRICE	ADJ UNIT PRICE	LAND VALUE	OTHER ADJUSTMENTS AND NOTES	YEAR	DENSITY	DECL	FRZ	YR	CONSRV

REVIEW DATE 03/04/2025 BY KW Total Acres: 0.00 Total Land Value: 0 Market: 0 Agricultural: 0 Common: 0 PRINTED 07/30/2025 BY SYS

ALL OF BLOCKS 197 & 235 & PT
OF BLOCK 211 IN OR 2568/1843 &
PT ABDN R/W PT OR 566/535-38

SREIT VINTAGE AMELIA LLC
C/O STARWOOD CAPITAL GROUP, 591 WEST PUTNAM AVE
GREENWICH, CT 06830

2025

00-00-31-1800-0197-0000

NASSAU COUNTY PROPERTY

BUILDING CHARACTERISTICS

ELEMENT	CD	CONSTRUCTION
Exterior Wall	10	ABOVE AVG 100
Roof Structur	04	WOOD TRUSS 100
Roof Cover	03	COMP SHNGL 100
Interior Wall	05	DRYWALL 100
Interior Floo	13	LVT/LAMNT 70
Interior Floo	14	CARPET 30
Air Condition	03	CENTRAL 100
Heating Type	04	AIR DUCTED 100
Bedrooms		2 100
Bathrooms		2 100
Frame	02	WOOD FRAME 100
Story Height		10 100
RMS		0 100
Units		24 100
Quality	04	Quality Level 04

DOR CODE 0300 MULTI-FAMILY
MAP NUM | MKT AREA 01
NEIGHBORHOOD/LOC 2002.00

AREA TYPE	TOTAL GROSS AREA	PCT OF BASE	YEAR	TOT ADJ AREA	SUBAREA MARKET VALUE
BAS	2,359	100	2019	2,359	438,829
BAS	2,359	100	2019	2,359	438,829
BAS	3,126	100	2019	3,126	581,509
CAN	362	30	2019	109	20,276
CAN	362	30	2019	109	20,276
CAN	466	30	2019	140	26,044
CAN	466	30	2019	140	26,044
CAN	630	30	2019	189	35,158
CAN	630	30	2023	189	35,158
FOP	84	30	2019	25	4,651
TOTALS	28,155			25,214	4,690,399

MARKET ADJUSTMENTS

TYPE	MDL	EFF. AREA	TOT ADJ PTS	EFF. BASE RATE	REPL. COST NEW	AYB	EYB	ECON	FNCT		NORM	% COND
0302	03	25,214	109.7250	189.82	4,786,121	2019	2019	0	0	0	2.00	98.00

4 APART/LUX – 0% - 2023 Heated Area: 23532 HX Base Yr

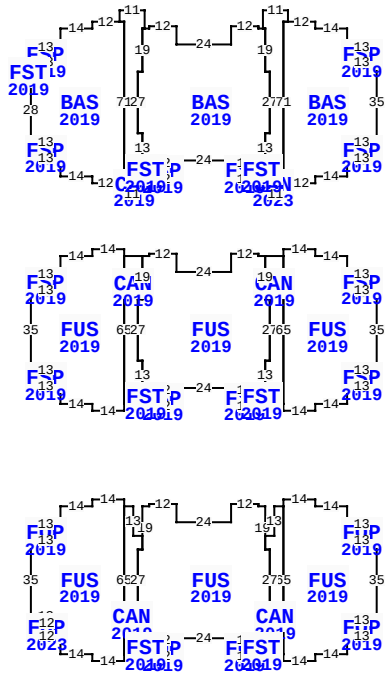

** This building has 40 Sub-Areas

2 VINTAGE WAY, FERNANDINA BEACH

BLD DATE	03/04/2025	KW	LGL DATE		
XF DATE	03/04/2025	KW	LAND DATE	04/23/2025	DC
INC DATE			AG DATE		

NASSAU COUNTY PROPERTY — VALUATION SUMMARY

VALUATION BY	DIRECT_CAP
Tax Group: 2	Tax Dist:
BUILDING MARKET VALUE	48,171,155
TOTAL MARKET OB/XF VALUE	0
TOTAL LAND VALUE - MARKET	0
TOTAL MARKET VALUE	48,171,155
SOH/AGL Deduction	0
ASSESSED VALUE	48,171,155
TOTAL EXEMPTION VALUE	0
BASE TAXABLE VALUE	48,171,155
TOTAL JUST VALUE	48,171,155
NCON VALUE	0
INCOME VALUE	48,171,155
PREVIOUS YEAR MKT VALUE	47,922,312

PERMIT NUM	DESCRIPTION	AMT	ISSUED

SALES DATA

OFF RECORD Number	DATE	TYPE INST	Q / U	V / I	RSN CD	SALE PRICE
2568/1843	6/08/2022	SW	Q	I	01	66,933,000
GRANTOR: VINTAGE AMELIA OWNER						
GRANTEE: SREIT VINTAGE AMELI						
2200/0197	5/31/2018	SW	U	V	30	3,000,000
GRANTOR: TDK LAND LLC						
GRANTEE: VINTAGE AMELIA OWNE						

BUILDING NOTES

BUILDING DIMENSIONS

BAS=[YR=2019;ORIG=-17,34] W2 N19 W1 W2 N1 W12 S8 W24 N8 W12 S1 W2 W1 S19 W2 S27 E2 S13 E3 E12 N1 E24 S1 E12 E3 N13 E2 N27 $
FUS=[YR=2019;ORIG=-19,115] W3 N1 W12 S8 W24 N8 W12 S1 W3 S19 W2 S27 E2 S13 E3 E12 N1 E24 S1 E12 E3 N13 E2 N27 W2 N19 $
FUS=[YR=2019;ORIG=-17,244] W2 N19 W3 N1 W12 S8 W24 N8 W12 S1 W3 S19 W2 S27 E2 S13 E3 E12 N1 E24 S1 E12 E3 N13 E2 N27 $
BAS=[YR=2019;ORIG=30,30] W13 N7 N8 W14 N3 W12 W2 S71 E2 E12 N3 E14 N8 N7 E13 N35 $
BAS=[YR=2019;ORIG=-81,12] W2 W12 S3 W14 S8 S7 W13 S2 S5 S28 E13 S7 S8 E14 S3 E12 E2 N71 $
FUS=[YR=2019;ORIG=30,130] W13 N7 N8 W14 N3 W14 S3 S65 S3 E14

EXTRA FEATURES

LN	OB/XF CODE	DESCRIPTION	BLD	CAP	L	W	UNITS	UT	Adj R	ADJ UNIT PRICE	ORIG COND	YEAR ON	YEAR ACTUAL	Q	% COND	OB/XF MKT VALUE	NOTES
31	0972	ST LGHT UN	0	0	0	0	7.00	UT	2,530.00	2,530.00	100	2019	2019	3	94	16,647	
32	0803	ASPHALT C	0	0	0	0	19,031.00	SF	2.00	2.00	100	2019	2019	3	82	31,211	
33	0803	ASPHALT C	0	0	0	0	24,520.00	SF	2.00	2.00	100	2019	2019	3	82	40,213	
34	0092	AUTO GATE	0	0	0	0	2.00	UT	3,500.00	3,500.00	100	2019	2019	3	82	5,740	
35	0972	ST LGHT UN	0	0	0	0	9.00	UT	2,530.00	2,530.00	100	2019	2019	3	94	21,404	
36	0812	CONCRETE C	0	0	0	0	8,305.00	SF	4.00	4.00	100	2019	2019	3	97	32,223	
37	0856	POROUS CC	0	0	0	0	13,821.00	SF	2.50	2.50	100	2019	2019	3	97	33,516	
38	0462	ST/AL FNC	0	0	32	6	192.00	SF	10.00	10.00	100	2019	2019	3	87	1,670	
39	0856	POROUS CC	16	0	18	17	306.00	SF	2.50	2.50	100	2019	2019	3	97	742	
40	0856	POROUS CC	10	0	0	0	1,440.00	SF	2.50	2.50	100	2019	2019	3	97	3,492	

TOTAL OB/XF 186,858

LAND DESCRIPTION

LN	USE CODE	CLS	LAND USE DESCRIPTION	CAP	RD	LOC ZONE	FRONT	DEPTH	TOT LND UTS	UNIT TYPE	DT	DPTH FACT	% COND	TOT ADJ	UNIT PRICE	ADJ UNIT PRICE	LAND VALUE	OTHER ADJUSTMENTS AND NOTES	YEAR	DENSITY	DECL	FRZ	YR	CONSRV

REVIEW DATE 03/04/2025 BY KW Total Acres: 0.00 Total Land Value: 0 Market: 0 Agricultural: 0 Common: 0 PRINTED 07/30/2025 BY SYS

ALL OF BLOCKS 197 & 235 & PT
OF BLOCK 211 IN OR 2568/1843 &
PT ABDN R/W PT OR 566/535-38

SREIT VINTAGE AMELIA LLC
C/O STARWOOD CAPITAL GROUP, 591 WEST PUTNAM AVE
GREENWICH, CT 06830

2025

00-00-31-1800-0197-0000

NASSAU COUNTY PROPERTY

BUILDING CHARACTERISTICS

ELEMENT	CD	CONSTRUCTION
Exterior Wall	10	ABOVE AVG 100
Roof Structur	04	WOOD TRUSS 100
Roof Cover	03	COMP SHNGL 100
Interior Wall	05	DRYWALL 100
Interior Floo	13	LVT/LAMNT 70
Interior Floo	14	CARPET 30
Air Condition	03	CENTRAL 100
Heating Type	04	AIR DUCTED 100
Bedrooms		2 100
Bathrooms		2 100
Frame	02	WOOD FRAME 100
Story Height		10 100
RMS		0 100
Units		2 100
Quality	04	Quality Level 04

DOR CODE 0300 MULTI-FAMILY
MAP NUM | MKT AREA 01
NEIGHBORHOOD/LOC 2002.00

AREA TYPE	TOTAL GROSS AREA	PCT OF BASE	YEAR	TOT ADJ AREA	SUBAREA MARKET VALUE
BAS	92	100	2019	92	18,556
BAS	92	100	2019	92	18,556
CAN	45	30	2019	14	2,823
CAN	45	30	2019	14	2,823
FGR	1,760	55	2019	968	195,240
FSP	99	55	2019	54	10,892
FSP	99	55	2019	54	10,892
FST	45	55	2019	25	5,042
FST	473	55	2019	260	52,441
FUS	1,105	100	2019	1,105	222,872
TOTALS	4,960			3,783	763,007

MARKET ADJUSTMENTS

TYPE	MDL	EFF. AREA	TOT ADJ PTS	EFF. BASE RATE	REPL. COST NEW	AYB	EYB	ECON	FNCT		NORM	% COND
0302	03	3,783	118.9650	205.81	778,579	2019	2019	0	0	0	2.00	98.00

5 APART/LUX – 0% - 2023 Heated Area: 2394 HX Base Yr

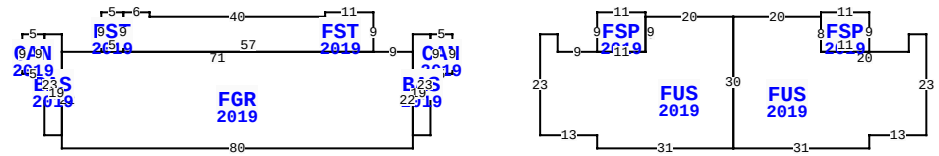

** This building has 11 Sub-Areas

2 VINTAGE WAY, FERNANDINA BEACH

BLD DATE	03/04/2025	KW	LGL DATE	
XF DATE	03/04/2025	KW	LAND DATE	04/23/2025 DC
INC DATE			AG DATE	

VALUATION SUMMARY

VALUATION BY	DIRECT_CAP
Tax Group: 2	Tax Dist:
BUILDING MARKET VALUE	48,171,155
TOTAL MARKET OB/XF VALUE	0
TOTAL LAND VALUE - MARKET	0
TOTAL MARKET VALUE	48,171,155
SOH/AGL Deduction	0
ASSESSED VALUE	48,171,155
TOTAL EXEMPTION VALUE	0
BASE TAXABLE VALUE	48,171,155
TOTAL JUST VALUE	48,171,155
NCON VALUE	0
INCOME VALUE	48,171,155
PREVIOUS YEAR MKT VALUE	47,922,312

PERMIT NUM	DESCRIPTION	AMT	ISSUED

SALES DATA

OFF RECORD Number	DATE	TYPE INST	Q / U	V / I	RSN CD	SALE PRICE
2568/1843	6/08/2022	SW	Q	I	01	66,933,000
GRANTOR: VINTAGE AMELIA OWNER						
GRANTEE: SREIT VINTAGE AMELI						
2200/0197	5/31/2018	SW	U	V	30	3,000,000
GRANTOR: TDK LAND LLC						
GRANTEE: VINTAGE AMELIA OWNE						

BUILDING NOTES

BUILDING DIMENSIONS

CAN=[YR=2019] W5 BAS=[YR=2019] W4 S4 FGR=[YR=2019] W9 FST=[YR=2019] N9 W11 S1 W40 N1 W6 FST=[YR=2019] W5 S9 E5 N9 $ S9 E57$ W71 BAS=[YR=2019] N4 W4 CAN=[YR=2019] W5 S9 E5 N9$ S23 E4 N19$ S22 E80 N22$ S19 E4 N23$ S9 E5 N9$ PTR= E20 FUS=[YR=2019] E4 S4 E9 FSP=[YR=2019] N9 E11 S9 W11$ E11 N8 E20 FUS=[YR=2019] E20 FSP=[YR=2019] N1 E11 S9 W11 N8$ S8 E20 N4 E4 S23 W13 S3 W31 N30$ S30 W31 N3 W13 N23$ W20$.

EXTRA FEATURES

LN	OB/XF CODE	DESCRIPTION	BLD	CAP	L	W	UNITS	UT	Adj R	ADJ UNIT PRICE	ORIG COND	YEAR ON	YEAR ACTUAL	Q	% COND	OB/XF MKT VALUE	NOTES
41	0424	CL FNC 6'	0	0	0	0	440.00	LF	20.00	20.00	100	2019	2019	3	94	8,272	
42	0812	CONCRETE C	0	0	0	0	1,217.00	SF	4.00	4.00	100	2019	2019	3	97	4,722	
43	0803	ASPHALT C	0	0	0	0	18,274.00	SF	2.00	2.00	100	2019	2019	3	82	29,969	
44	0092	AUTO GATE	0	0	0	0	2.00	UT	3,500.00	3,500.00	100	2019	2019	3	82	5,740	
45	0819	CONC 12"	0	0	14	3	42.00	SF	9.50	9.50	100	2019	2019	3	97	387	
46	0810	CONCRETE A	0	0	0	0	72.00	SF	6.50	6.50	100	2019	2019	3	97	454	
47	0855	CONC PAVER	0	0	0	0	4,164.00	SF	10.00	10.00	100	2019	2019	3	97	40,391	
48	0972	ST LGHT UN	0	0	0	0	8.00	UT	2,530.00	2,530.00	100	2019	2019	3	94	19,026	
49	1126	CB/STC 8"	0	0	0	0	50.00	SF	8.00	8.00	100	2019	2019	3	97	388	
50	0648	LIGHTS-AV	0	0	0	0	4.00	UT	140.00	140.00	100	2019	2019	3	82	459	

TOTAL OB/XF 109,808

LAND DESCRIPTION

LN	USE CODE	CLS	LAND USE DESCRIPTION	CAP	RD	LOC ZONE	FRONT	DEPTH	TOT LND UTS	UNIT TYPE	DT	DPTH FACT	% COND	TOT ADJ	UNIT PRICE	ADJ UNIT PRICE	LAND VALUE	OTHER ADJUSTMENTS AND NOTES	YEAR	DENSITY	DECL	FRZ	YR	CONSRV

REVIEW DATE 03/04/2025 BY KW Total Acres: 0.00 Total Land Value: 0 Market: 0 Agricultural: 0 Common: 0 PRINTED 07/30/2025 BY SYS

ALL OF BLOCKS 197 & 235 & PT
OF BLOCK 211 IN OR 2568/1843 &
PT ABDN R/W PT OR 566/535-38

SREIT VINTAGE AMELIA LLC
C/O STARWOOD CAPITAL GROUP, 591 WEST PUTNAM AVE
GREENWICH, CT 06830

2025

00-00-31-1800-0197-0000

NASSAU COUNTY PROPERTY

BUILDING CHARACTERISTICS

ELEMENT	CD	CONSTRUCTION
Exterior Wall	10	ABOVE AVG 100
Roof Structur	04	WOOD TRUSS 100
Roof Cover	03	COMP SHNGL 100
Interior Wall	05	DRYWALL 100
Interior Floo	13	LVT/LAMNT 70
Interior Floo	14	CARPET 30
Air Condition	03	CENTRAL 100
Heating Type	04	AIR DUCTED 100
Bedrooms		3 100
Bathrooms		2 100
Frame	02	WOOD FRAME 100
Story Height		10 100
RMS		0 100
Units		24 100
Quality	04	Quality Level 04

DOR CODE 0300 MULTI-FAMILY
MAP NUM | MKT AREA 01
NEIGHBORHOOD/LOC 2002.00

AREA TYPE	TOTAL GROSS AREA	PCT OF BASE	YEAR	TOT ADJ AREA	SUBAREA MARKET VALUE
BAS	2,750	100	2019	2,750	516,443
BAS	2,750	100	2019	2,750	516,443
BAS	4,504	100	2019	4,504	845,840
CAN	377	30	2019	113	21,221
CAN	377	30	2019	113	21,221
CAN	455	30	2019	136	25,541
CAN	455	30	2019	136	25,541
CAN	607	30	2019	182	34,179
CAN	607	30	2019	182	34,179
FOP	91	30	2019	27	5,071
TOTALS	34,632			31,687	5,950,736

MARKET ADJUSTMENTS

TYPE	MDL	EFF. AREA	TOT ADJ PTS	EFF. BASE RATE	REPL. COST NEW	AYB	EYB	ECON	FNCT		NORM	% COND
0302	03	31,687	110.7700	191.63	6,072,180	2019	2019	0	0	0	2.00	98.00

6 APART/LUX – 0% - 2023 Heated Area: 30012 HX Base Yr

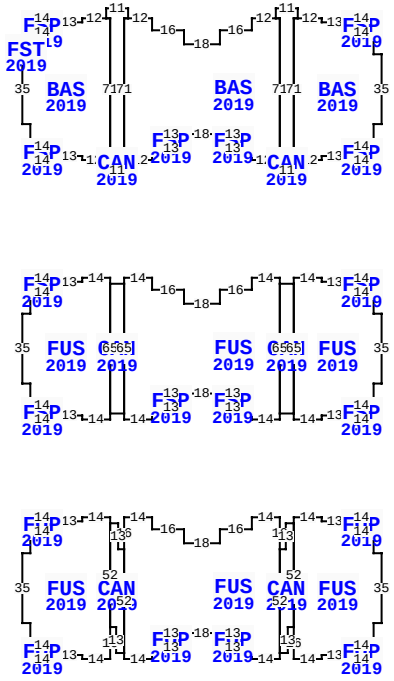

** This building has 34 Sub-Areas

2 VINTAGE WAY, FERNANDINA BEACH

BLD DATE	03/04/2025 KW	LGL DATE	
XF DATE	03/04/2025 KW	LAND DATE	04/23/2025 DC
INC DATE		AG DATE	

NASSAU COUNTY PROPERTY — VALUATION SUMMARY

VALUATION BY	DIRECT_CAP
Tax Group: 2	Tax Dist:
BUILDING MARKET VALUE	48,171,155
TOTAL MARKET OB/XF VALUE	0
TOTAL LAND VALUE - MARKET	0
TOTAL MARKET VALUE	48,171,155
SOH/AGL Deduction	0
ASSESSED VALUE	48,171,155
TOTAL EXEMPTION VALUE	0
BASE TAXABLE VALUE	48,171,155
TOTAL JUST VALUE	48,171,155
NCON VALUE	0
INCOME VALUE	48,171,155
PREVIOUS YEAR MKT VALUE	47,922,312

PERMIT NUM	DESCRIPTION	AMT	ISSUED

SALES DATA

OFF RECORD Number	DATE	TYPE INST	Q / U	V / I	RSN CD	SALE PRICE
2568/1843	6/08/2022	SW	Q	I	01	66,933,000
GRANTOR: VINTAGE AMELIA OWNER						
GRANTEE: SREIT VINTAGE AMELI						
2200/0197	5/31/2018	SW	U	V	30	3,000,000
GRANTOR: TDK LAND LLC						
GRANTEE: VINTAGE AMELIA OWNE						

BUILDING NOTES

BUILDING DIMENSIONS

BAS=[YR=2019;ORIG=-48,43] W2 W12 S6 W16 S7 W18 N7 W16 N6 W12 W2 S71 E2 E12 N6 E3 N7 E13 E18 E13 S7 E3 S6 E12 E2 N71 $
FUS=[YR=2019;ORIG=-48,173] S3 S65 S3 W14 N6 W3 N7 W13 W18 W13 S7 W3 S6 W14 N3 N65 N3 E14 S6 E16 S7 E18 N7 E16 N6 E14 $
FUS=[YR=2019;ORIG=-48,364] N3 N52 N16 W14 S6 W16 S7 W18 N7 W16 N6 W14 S16 S52 S3 E14 N6 E3 N7 E13 E18 E13 S7 E3 S6 E14 $
BAS=[YR=2019;ORIG=0,50] W14 N5 W13 N2 W12 W2 S71 E2 E12 N2 E13 N5 E14 N2 W1 N9 E4 N35 W4 N9 E1 N2 $
BAS=[YR=2019;ORIG=-133,43] W2 W12 S2 W13 S5 W14 S2 E1 S4 S5 W4 S35 E4 S9 W1 S2 E14 S5 E13 S2 E12 E2 N71 $
FUS=[YR=2019;ORIG=0,180] W14 N5 W13 N2 W14 S3 S65 S3 E14 N2 E13 N5 E14 N2 W1 N9 E4 N35 W4 N9 E1 N2 $

EXTRA FEATURES

LN	OB/XF CODE	DESCRIPTION	BLD	CAP	L	W	UNITS	UT	Adj R	ADJ UNIT PRICE	ORIG COND	YEAR ON	YEAR ACTUAL	Q	% COND	OB/XF MKT VALUE	NOTES
51	0811	CONCRETE B	0	0	0	0	584.00	SF	5.20	5.20	100	2019	2019	3	97	2,946	
52	0819	CONC 12"	0	0	14	3	42.00	SF	9.50	9.50	100	2019	2019	3	97	387	
53	0092	AUTO GATE	0	0	0	0	2.00	UT	3,500.00	3,500.00	100	2019	2019	3	82	5,740	
54	0855	CONC PAVER	0	0	0	0	3,408.00	SF	10.00	10.00	100	2019	2019	3	97	33,058	
55	0810	CONCRETE A	0	0	0	0	107.00	SF	6.50	6.50	100	2019	2019	3	97	675	
56	0812	CONCRETE C	0	0	0	0	3,035.00	SF	4.00	4.00	100	2019	2019	3	97	11,776	
57	0400	CONC CURB	0	0	0	0	1,075.00	LF	15.00	15.00	100	2019	2019	3	98	15,803	
58	1126	CB/STC 8"	0	0	0	0	50.00	SF	8.00	8.00	100	2019	2019	3	97	388	
59	0648	LIGHTS-AV	0	0	0	0	4.00	UT	140.00	140.00	100	2019	2019	3	82	459	
60	1126	CB/STC 8"	16	0	0	0	240.00	SF	8.00	8.00	100	2019	2019	3	97	1,862	

TOTAL OB/XF 73,094

LAND DESCRIPTION

LN	USE CODE	CLS	LAND USE DESCRIPTION	CAP	RD	LOC ZONE	FRONT	DEPTH	TOT LND UTS	UNIT TYPE	DT	DPTH FACT	% COND	TOT ADJ	UNIT PRICE	ADJ UNIT PRICE	LAND VALUE	OTHER ADJUSTMENTS AND NOTES	YEAR	DENSITY	DECL	FRZ	YR	CONSRV

REVIEW DATE 03/04/2025 BY KW Total Acres: 0.00 Total Land Value: 0 Market: 0 Agricultural: 0 Common: 0 PRINTED 07/30/2025 BY SYS

ALL OF BLOCKS 197 & 235 & PT
OF BLOCK 211 IN OR 2568/1843 &
PT ABDN R/W PT OR 566/535-38

SREIT VINTAGE AMELIA LLC
C/O STARWOOD CAPITAL GROUP, 591 WEST PUTNAM AVE
GREENWICH, CT 06830

2025

00-00-31-1800-0197-0000

NASSAU COUNTY PROPERTY

BUILDING CHARACTERISTICS

ELEMENT	CD	CONSTRUCTION
Exterior Wall	10	ABOVE AVG 100
Roof Structur	04	WOOD TRUSS 100
Roof Cover	03	COMP SHNGL 100
Interior Wall	05	DRYWALL 100
Interior Floo	13	LVT/LAMNT 70
Interior Floo	14	CARPET 30
Air Condition	03	CENTRAL 100
Heating Type	04	AIR DUCTED 100
Bedrooms		2 100
Bathrooms		2 100
Frame	02	WOOD FRAME 100
Story Height		10 100
RMS		0 100
Units		24 100
Quality	04	Quality Level 04

DOR CODE 0300 MULTI-FAMILY
MAP NUM | MKT AREA 01
NEIGHBORHOOD/LOC 2002.00

AREA TYPE	TOTAL GROSS AREA	PCT OF BASE	YEAR	TOT ADJ AREA	SUBAREA MARKET VALUE
BAS	1,551	100	2019	1,551	288,523
BAS	1,551	100	2019	1,551	288,523
BAS	4,563	100	2019	4,563	848,826
CAN	362	30	2019	109	20,276
CAN	362	30	2019	109	20,276
CAN	466	30	2019	140	26,044
CAN	466	30	2019	140	26,044
CAN	630	30	2019	189	35,158
CAN	630	30	2019	189	35,158
FOP	84	30	2019	25	4,651
TOTALS	27,037			24,405	4,539,906

MARKET ADJUSTMENTS

TYPE	MDL	EFF. AREA	TOT ADJ PTS	EFF. BASE RATE	REPL. COST NEW	AYB	EYB	ECON	FNCT		NORM	% COND
0302	03	24,405	109.7250	189.82	4,632,557	2019	2019	0	0	0	2.00	98.00

7 APART/LUX – 0% - 2023 Heated Area: 22995 HX Base Yr

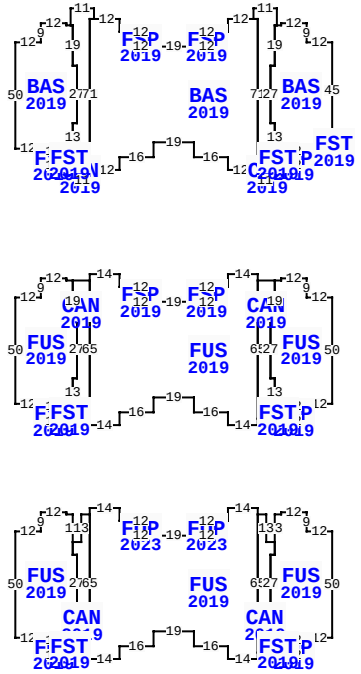

** This building has 34 Sub-Areas

2 VINTAGE WAY, FERNANDINA BEACH

BLD DATE	03/04/2025 KW	LGL DATE	
XF DATE	03/04/2025 KW	LAND DATE	04/23/2025 DC
INC DATE		AG DATE	

NASSAU COUNTY PROPERTY — VALUATION SUMMARY

VALUATION BY	DIRECT_CAP
Tax Group: 2	Tax Dist:
BUILDING MARKET VALUE	48,171,155
TOTAL MARKET OB/XF VALUE	0
TOTAL LAND VALUE - MARKET	0
TOTAL MARKET VALUE	48,171,155
SOH/AGL Deduction	0
ASSESSED VALUE	48,171,155
TOTAL EXEMPTION VALUE	0
BASE TAXABLE VALUE	48,171,155
TOTAL JUST VALUE	48,171,155
NCON VALUE	0
INCOME VALUE	48,171,155
PREVIOUS YEAR MKT VALUE	47,922,312

PERMIT NUM	DESCRIPTION	AMT	ISSUED

SALES DATA

OFF RECORD Number	DATE	TYPE INST	Q / U	V / I	RSN CD	SALE PRICE
2568/1843	6/08/2022	SW	Q	I	01	66,933,000
GRANTOR: VINTAGE AMELIA OWNER						
GRANTEE: SREIT VINTAGE AMELI						
2200/0197	5/31/2018	SW	U	V	30	3,000,000
GRANTOR: TDK LAND LLC						
GRANTEE: VINTAGE AMELIA OWNE						

BUILDING NOTES

BUILDING DIMENSIONS

BAS=[YR=2019;ORIG=-35,139] W2 W12 S6 W4 S7 W12 W19 W12 N7 W4 N6 W12 W2 S71 E2 E12 N6 E16 N7 E19 S7 E16 S6 E12 E2 N71 $
FUS=[YR=2019;ORIG=-35,259] S3 S65 S3 W14 N6 W16 N7 W19 S7 W16 S6 W14 N3 N65 N3 E14 S6 E4 S7 E12 E19 E12 N7 E4 N6 E14 $
FUS=[YR=2019;ORIG=-35,369] S3 S65 S3 W14 N6 W16 N7 W19 S7 W16 S6 W14 N3 N65 N3 E14 S6 E4 S7 E12 E19 E12 N7 E4 N6 E14 $
BAS=[YR=2019;ORIG=0,150] W12 N9 W12 S1 W2 W1 S19 W2 S27 E2 S13 E3 E12 N1 E12 N5 N45 $
BAS=[YR=2019;ORIG=-122,142] W1 W2 N1 W12 S9 W12 S50 E12 S1 E12 E3 N13 E2 N27 W2 N19 $
FUS=[YR=2019;ORIG=0,270] W12 N9 W12 S1 W3 S19 W2 S27 E2 S13 E3 E12 N1 E12 N50 $

EXTRA FEATURES

LN	OB/XF CODE	DESCRIPTION	BLD	CAP	L	W	UNITS	UT	Adj R	ADJ UNIT PRICE	ORIG COND	YEAR ON	YEAR ACTUAL	Q	% COND	OB/XF MKT VALUE	NOTES
61	0810	CONCRETE A	16	0	14	3	42.00	SF	6.50	6.50	100	2019	2019	3	97	265	
62	0463	FENCE GATE	16	0	0	0	4.00	UT	600.00	600.00	100	2019	2019	3	94	2,256	
63	0810	CONCRETE A	10	0	0	0	366.00	SF	6.50	6.50	100	2019	2019	3	97	2,308	
64	0400	CONC CURB	10	0	0	0	29.00	LF	15.00	15.00	100	2019	2019	3	98	426	
65	6002	EL ROLL DR	10	0	0	0	1.00	UT	900.00	900.00	100	2019	2019	3	82	738	
66	1075	TRELLIS G	1	0	36	10	360.00	SF	52.50	52.50	100	2019	2019	3	87	16,443	
67	0966	FIRE SPRNK	1	0	0	0	5,266.00	SF	3.00	3.00	100	2019	2019	3	97	15,324	
68	0966	FIRE SPRNK	2	0	0	0	23,326.00	SF	3.00	3.00	100	2019	2019	3	97	67,879	
69	0966	FIRE SPRNK	3	0	0	0	4,672.00	SF	3.00	3.00	100	2019	2019	3	97	13,596	
70	0966	FIRE SPRNK	4	0	0	0	23,326.00	SF	3.00	3.00	100	2019	2019	3	97	67,879	

TOTAL OB/XF 187,114

LAND DESCRIPTION

LN	USE CODE	CLS	LAND USE DESCRIPTION	CAP	RD	LOC ZONE	FRONT	DEPTH	TOT LND UTS	UNIT TYPE	DT	DPTH FACT	% COND	TOT ADJ	UNIT PRICE	ADJ UNIT PRICE	LAND VALUE	OTHER ADJUSTMENTS AND NOTES	YEAR	DENSITY	DECL	FRZ	YR	CONSRV

REVIEW DATE 03/04/2025 BY KW Total Acres: 0.00 Total Land Value: 0 Market: 0 Agricultural: 0 Common: 0 PRINTED 07/30/2025 BY SYS

ALL OF BLOCKS 197 & 235 & PT
OF BLOCK 211 IN OR 2568/1843 &
PT ABDN R/W PT OR 566/535-38

SREIT VINTAGE AMELIA LLC
C/O STARWOOD CAPITAL GROUP, 591 WEST PUTNAM AVE
GREENWICH, CT 06830

2025

00-00-31-1800-0197-0000

NASSAU COUNTY PROPERTY

BUILDING CHARACTERISTICS

ELEMENT	CD	CONSTRUCTION
Exterior Wall	10	ABOVE AVG 100
Roof Structur	04	WOOD TRUSS 100
Roof Cover	03	COMP SHNGL 100
Interior Wall	05	DRYWALL 100
Interior Floo	13	LVT/LAMNT 70
Interior Floo	14	CARPET 30
Air Condition	03	CENTRAL 100
Heating Type	04	AIR DUCTED 100
Bedrooms		2 100
Bathrooms		2 100
Frame	02	WOOD FRAME 100
Story Height		10 100
RMS		0 100
Units		24 100
Quality	04	Quality Level 04
DOR CODE	0300	MULTI-FAMILY
MAP NUM		MKT AREA 01
NEIGHBORHOOD/LOC	2002.00	

AREA TYPE	TOTAL GROSS AREA	PCT OF BASE	YEAR	TOT ADJ AREA	SUBAREA MARKET VALUE
BAS	1,551	100	2019	1,551	288,523
BAS	1,551	100	2019	1,551	288,523
BAS	4,563	100	2019	4,563	848,826
CAN	362	30	2019	109	20,276
CAN	362	30	2019	109	20,276
CAN	466	30	2019	140	26,044
CAN	466	30	2019	140	26,044
CAN	630	30	2019	189	35,158
CAN	630	30	2019	189	35,158
FOP	18	30	2019	5	930
TOTALS	27,037			24,400	4,538,976

MARKET ADJUSTMENTS

TYPE	MDL	EFF. AREA	TOT ADJ PTS	EFF. BASE RATE	REPL. COST NEW	AYB	EYB	ECON	FNCT		NORM	% COND
0302	03	24,400	109.7250	189.82	4,631,608	2019	2019	0	0	0	2.00	98.00

8 APART/LUX – 0% - 2023 Heated Area: 22995 HX Base Yr

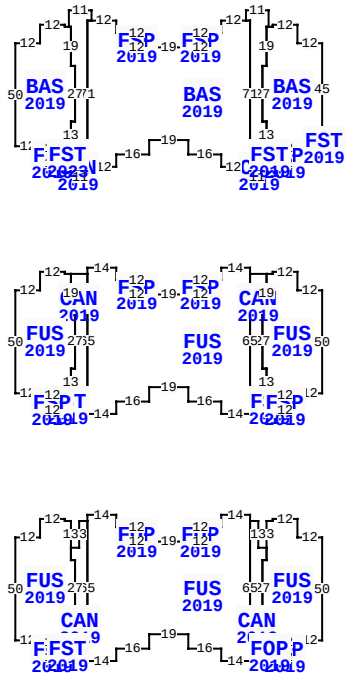

** This building has 34 Sub-Areas

2 VINTAGE WAY, FERNANDINA BEACH

BLD DATE	03/04/2025 KW	LGL DATE	
XF DATE	03/04/2025 KW	LAND DATE	04/23/2025 DC
INC DATE		AG DATE	

NASSAU COUNTY PROPERTY — VALUATION SUMMARY

VALUATION BY	DIRECT_CAP
Tax Group: 2	Tax Dist:
BUILDING MARKET VALUE	48,171,155
TOTAL MARKET OB/XF VALUE	0
TOTAL LAND VALUE - MARKET	0
TOTAL MARKET VALUE	48,171,155
SOH/AGL Deduction	0
ASSESSED VALUE	48,171,155
TOTAL EXEMPTION VALUE	0
BASE TAXABLE VALUE	48,171,155
TOTAL JUST VALUE	48,171,155
NCON VALUE	0
INCOME VALUE	48,171,155
PREVIOUS YEAR MKT VALUE	47,922,312

PERMIT NUM	DESCRIPTION	AMT	ISSUED

SALES DATA

OFF RECORD Number	DATE	TYPE INST	Q / U	V / I	RSN CD	SALE PRICE
2568/1843	6/08/2022	SW	Q	I	01	66,933,000
GRANTOR: VINTAGE AMELIA OWNER						
GRANTEE: SREIT VINTAGE AMELI						
2200/0197	5/31/2018	SW	U	V	30	3,000,000
GRANTOR: TDK LAND LLC						
GRANTEE: VINTAGE AMELIA OWNE						

BUILDING NOTES

BUILDING DIMENSIONS

BAS=[YR=2019;ORIG=0,30] W12 N9 W12 S1 W2 W1 S19 W2 S27 E2 S13 E3 E12 N1 E12 N5 N45 $
CAN=[YR=2019;ORIG=-26,22] N8 W11 S5 E2 S71 W2 S5 E11 N8 W1 N6 N13 W2 N27 E2 N19 E1 $
BAS=[YR=2019;ORIG=-35,19] W2 W12 S6 W4 S7 W12 W19 W12 N7 W4 N6 W12 W2 S71 E2 E12 N6 E16 N7 E19 S7 E16 S6 E12 E2 N71 $
CAN=[YR=2019;ORIG=-112,19] N5 W11 S8 E1 S19 E2 S27 W2 S13 S6 W1 S8 E11 N5 W2 N71 E2 $
BAS=[YR=2019;ORIG=-122,22] W1 W2 N1 W12 S9 W12 S50 E12 S1 E12 E3 N13 E2 N27 W2 N19 $
FSP=[YR=2019;ORIG=-137,81] E12 S7 W12 N7 $
FST=[YR=2023;ORIG=-125,81] E3 S6 W3 N6 $

EXTRA FEATURES

LN	OB/XF CODE	DESCRIPTION	BLD	CAP	L	W	UNITS	UT	Adj R	ADJ UNIT PRICE	ORIG COND	YEAR ON	YEAR ACTUAL	Q	% COND	OB/XF MKT VALUE	NOTES
71	0966	FIRE SPRNK	5	0	0	0	4,672.00	SF	3.00	3.00	100	2019	2019	3	97	13,596	
72	0966	FIRE SPRNK	6	0	0	0	30,012.00	SF	3.00	3.00	100	2019	2019	3	97	87,335	
73	0966	FIRE SPRNK	7	0	0	0	22,850.00	SF	3.00	3.00	100	2019	2019	3	97	66,494	
74	0966	FIRE SPRNK	8	0	0	0	22,850.00	SF	3.00	3.00	100	2019	2019	3	97	66,494	
75	0966	FIRE SPRNK	9	0	0	0	4,672.00	SF	3.00	3.00	100	2019	2019	3	97	13,596	
76	0966	FIRE SPRNK	10	0	0	0	772.00	SF	3.00	3.00	100	2019	2019	3	97	2,247	
77	0350	CARPORT WD	0	0	16	8	128.00	SF	13.00	13.00	100	2019	2019	3	82	1,364	
78	0400	CONC CURB	0	0	0	0	1,194.00	LF	15.00	15.00	100	2019	2019	3	98	17,552	
79	0400	CONC CURB	0	0	0	0	270.00	LF	15.00	15.00	100	2019	2019	3	98	3,969	
80	0803	ASPHALT C	0	0	0	0	33,223.00	SF	2.00	2.00	100	2020	2020	3	84	55,815	

TOTAL OB/XF 328,462

LAND DESCRIPTION

LN	USE CODE	CLS	LAND USE DESCRIPTION	CAP	RD	LOC ZONE	FRONT	DEPTH	TOT LND UTS	UNIT TYPE	DT	DPTH FACT	% COND	TOT ADJ	UNIT PRICE	ADJ UNIT PRICE	LAND VALUE	OTHER ADJUSTMENTS AND NOTES	YEAR	DENSITY	DECL	FRZ	YR	CONSRV

REVIEW DATE 03/04/2025 BY KW Total Acres: 0.00 Total Land Value: 0 Market: 0 Agricultural: 0 Common: 0 PRINTED 07/30/2025 BY SYS

ALL OF BLOCKS 197 & 235 & PT
OF BLOCK 211 IN OR 2568/1843 &
PT ABDN R/W PT OR 566/535-38

SREIT VINTAGE AMELIA LLC
C/O STARWOOD CAPITAL GROUP, 591 WEST PUTNAM AVE
GREENWICH, CT 06830

2025

00-00-31-1800-0197-0000

NASSAU COUNTY PROPERTY

BUILDING CHARACTERISTICS

ELEMENT	CD	CONSTRUCTION
Exterior Wall	10	ABOVE AVG 100
Roof Structur	04	WOOD TRUSS 100
Roof Cover	03	COMP SHNGL 100
Interior Wall	05	DRYWALL 100
Interior Floo	13	LVT/LAMNT 70
Interior Floo	14	CARPET 30
Air Condition	03	CENTRAL 100
Heating Type	04	AIR DUCTED 100
Bedrooms		2 100
Bathrooms		2 100
Frame	02	WOOD FRAME 100
Story Height		10 100
RMS		0 100
Units		2 100
Quality	04	Quality Level 04
DOR CODE	0300	MULTI-FAMILY
MAP NUM		MKT AREA 01
NEIGHBORHOOD/LOC	2002.00	

AREA TYPE	TOTAL GROSS AREA	PCT OF BASE	YEAR	TOT ADJ AREA	SUBAREA MARKET VALUE
BAS	92	100	2019	92	18,556
BAS	92	100	2019	92	18,556
CAN	45	30	2019	14	2,823
CAN	45	30	2019	14	2,823
FGR	1,760	55	2019	968	195,240
FSP	99	55	2019	54	10,892
FSP	99	55	2019	54	10,892
FST	45	55	2019	25	5,042
FST	473	55	2019	260	52,441
FUS	1,105	100	2019	1,105	222,872
TOTALS	4,960			3,783	763,007

MARKET ADJUSTMENTS

TYPE	MDL	EFF. AREA	TOT ADJ PTS	EFF. BASE RATE	REPL. COST NEW	AYB	EYB	ECON	FNCT		NORM	% COND
0302	03	3,783	118.9650	205.81	778,579	2019	2019	0	0	0	2.00	98.00

9 APART/LUX – 0% - 2023 Heated Area: 2394 HX Base Yr

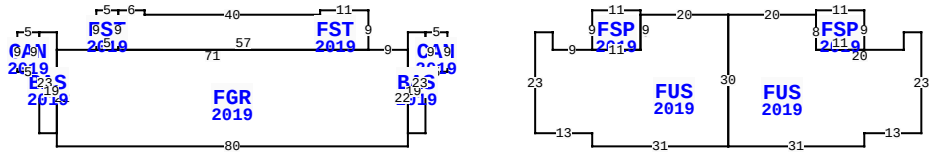

** This building has 11 Sub-Areas

2 VINTAGE WAY, FERNANDINA BEACH

BLD DATE	03/04/2025 KW	LGL DATE	
XF DATE	03/04/2025 KW	LAND DATE	04/23/2025 DC
INC DATE		AG DATE	

NASSAU COUNTY PROPERTY — VALUATION SUMMARY

VALUATION BY	DIRECT_CAP
Tax Group: 2	Tax Dist:
BUILDING MARKET VALUE	48,171,155
TOTAL MARKET OB/XF VALUE	0
TOTAL LAND VALUE - MARKET	0
TOTAL MARKET VALUE	48,171,155
SOH/AGL Deduction	0
ASSESSED VALUE	48,171,155
TOTAL EXEMPTION VALUE	0
BASE TAXABLE VALUE	48,171,155
TOTAL JUST VALUE	48,171,155
NCON VALUE	0
INCOME VALUE	48,171,155
PREVIOUS YEAR MKT VALUE	47,922,312

PERMIT NUM	DESCRIPTION	AMT	ISSUED

SALES DATA

OFF RECORD Number	DATE	TYPE INST	Q / U	V / I	RSN CD	SALE PRICE
2568/1843	6/08/2022	SW	Q	I	01	66,933,000
GRANTOR: VINTAGE AMELIA OWNER						
GRANTEE: SREIT VINTAGE AMELI						
2200/0197	5/31/2018	SW	U	V	30	3,000,000
GRANTOR: TDK LAND LLC						
GRANTEE: VINTAGE AMELIA OWNE						

BUILDING NOTES

BUILDING DIMENSIONS

CAN=[YR=2019] W5 BAS=[YR=2019] W4 S4 FGR=[YR=2019] W9 FST=[YR=2019] N9 W11 S1 W40 N1 W6 FST=[YR=2019] W5 S9 E5 N9 $ S9 E57$ W71 BAS=[YR=2019] N4 W4 CAN=[YR=2019] W5 S9 E5 N9$ S23 E4 N19$ S22 E80 N22$ S19 E4 N23$ S9 E5 N9$ PTR= E20 FUS=[YR=2019] E4 S4 E9 FSP=[YR=2019] N9 E11 S9 W11$ E11 N8 E20 FUS=[YR=2019] E20 FSP=[YR=2019] N1 E11 S9 W11 N8$ S8 E20 N4 E4 S23 W13 S3 W31 N30$ S30 W31 N3 W13 N23$ W20$.

EXTRA FEATURES

LN	OB/XF CODE	DESCRIPTION	BLD	CAP	L	W	UNITS	UT	Adj R	ADJ UNIT PRICE	ORIG COND	YEAR ON	YEAR ACTUAL	Q	% COND	OB/XF MKT VALUE	NOTES
81	0400	CONC CURB	0	0	0	0	2,095.00	LF	15.00	15.00	100	2020	2020	3	99	31,111	
82	0856	POROUS CC	0	0	0	0	31,824.00	SF	2.50	2.50	100	2020	2020	3	98	77,969	
83	0812	CONCRETE C	0	0	0	0	2,745.00	SF	4.00	4.00	100	2020	2020	3	98	10,760	
84	0648	LIGHTS-AV	0	0	0	0	8.00	UT	140.00	140.00	100	2020	2020	3	86	963	
85	0649	LIGHTS-GD	0	0	0	0	2.00	SF	225.00	225.00	100	2020	2020	3	86	387	
86	0972	ST LGHT UN	0	0	0	0	13.00	UT	2,530.00	2,530.00	100	2020	2020	3	95	31,246	
87	1075	TRELLIS G	0	0	0	0	395.00	SF	52.50	52.50	100	2020	2020	3	90	18,664	
88	0400	CONC CURB	0	0	0	0	74.00	LF	15.00	15.00	100	2020	2020	3	99	1,099	
89	0812	CONCRETE C	0	0	0	0	11,271.00	SF	4.00	4.00	100	2020	2020	3	98	44,182	
90	0462	ST/AL FNC	10	0	0	0	1,584.00	SF	10.00	10.00	100	2020	2020	3	90	14,256	

TOTAL OB/XF 230,637

LAND DESCRIPTION

LN	USE CODE	CLS	LAND USE DESCRIPTION	CAP	RD	LOC ZONE	FRONT	DEPTH	TOT LND UTS	UNIT TYPE	DT	DPTH FACT	% COND	TOT ADJ	UNIT PRICE	ADJ UNIT PRICE	LAND VALUE	OTHER ADJUSTMENTS AND NOTES	YEAR	DENSITY	DECL	FRZ	YR	CONSRV

REVIEW DATE 03/04/2025 BY KW Total Acres: 0.00 Total Land Value: 0 Market: 0 Agricultural: 0 Common: 0 PRINTED 07/30/2025 BY SYS

ALL OF BLOCKS 197 & 235 & PT
OF BLOCK 211 IN OR 2568/1843 &
PT ABDN R/W PT OR 566/535-38

SREIT VINTAGE AMELIA LLC
C/O STARWOOD CAPITAL GROUP, 591 WEST PUTNAM AVE
GREENWICH, CT 06830

2025

00-00-31-1800-0197-0000

NASSAU COUNTY PROPERTY

BUILDING CHARACTERISTICS

ELEMENT	CD	CONSTRUCTION
Exterior Wall	10	ABOVE AVG 100
Roof Structur	04	WOOD TRUSS 100
Roof Cover	03	COMP SHNGL 100
Interior Wall	05	DRYWALL 100
Interior Floo	03	CONC FINSH 70
Interior Floo	11	CLAY TILE 30
Air Condition	03	CENTRAL 100
Heating Type	04	AIR DUCTED 100
Bedrooms		0 100
Bathrooms		0 100
Frame	02	WOOD FRAME 100
Story Height		9 100
RMS		2 100
Units		0 100
Quality	04	Quality Level 04

DOR CODE	0300	MULTI-FAMILY	
MAP NUM		MKT AREA	01
NEIGHBORHOOD/LOC	2002.00		

AREA TYPE	TOTAL GROSS AREA	PCT OF BASE	YEAR	TOT ADJ AREA	SUBAREA MARKET VALUE
BAS	221	100	2019	221	7,285
BAS	551	100	2019	551	18,165
CAN	100	30	2019	30	989
TOTALS	872			802	26,439

MARKET ADJUSTMENTS

TYPE	MDL	EFF. AREA	TOT ADJ PTS	EFF. BASE RATE	REPL. COST NEW	AYB	EYB	ECON	FNCT		NORM	% COND
0304	03	802	104.2965	33.64	26,979	2019	2019	0	0	0	2.00	98.00

10 APART/GAR – 0% - 2023 Heated Area: 772 HX Base Yr

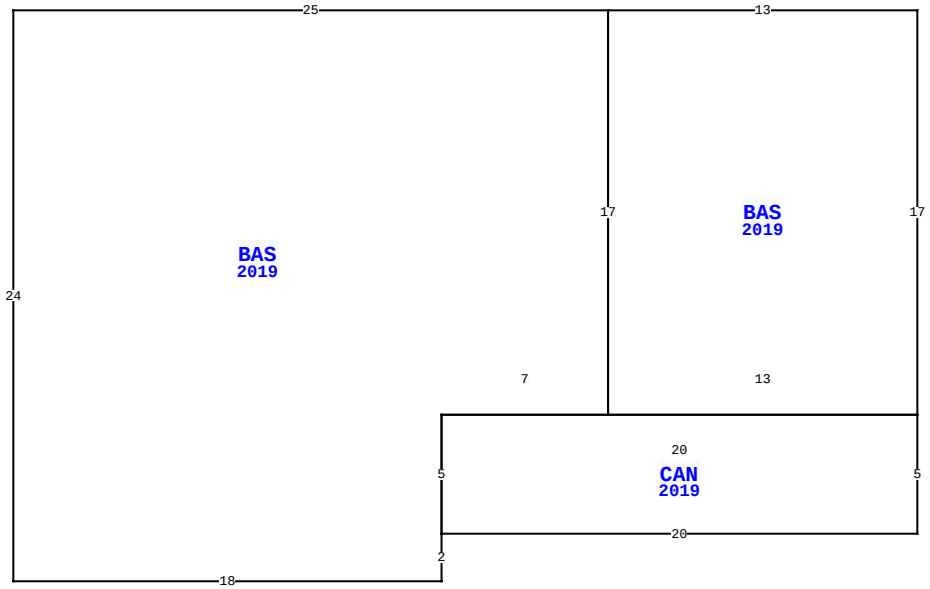

BLD DATE	03/04/2025	KW	LGL DATE
XF DATE	03/04/2025	KW	LAND DATE 04/23/2025 DC
INC DATE			AG DATE

2 VINTAGE WAY, FERNANDINA BEACH

VALUATION SUMMARY

VALUATION BY	DIRECT_CAP
Tax Group: 2	Tax Dist:
BUILDING MARKET VALUE	48,171,155
TOTAL MARKET OB/XF VALUE	0
TOTAL LAND VALUE - MARKET	0
TOTAL MARKET VALUE	48,171,155
SOH/AGL Deduction	0
ASSESSED VALUE	48,171,155
TOTAL EXEMPTION VALUE	0
BASE TAXABLE VALUE	48,171,155
TOTAL JUST VALUE	48,171,155
NCON VALUE	0
INCOME VALUE	48,171,155
PREVIOUS YEAR MKT VALUE	47,922,312

PERMIT NUM	DESCRIPTION	AMT	ISSUED

SALES DATA

OFF RECORD Number	DATE	TYPE INST	Q / U	V / I	RSN CD	SALE PRICE
2568/1843	6/08/2022	SW	Q	I	01	66,933,000
GRANTOR: VINTAGE AMELIA OWNER						
GRANTEE: SREIT VINTAGE AMELI						
2200/0197	5/31/2018	SW	U	V	30	3,000,000
GRANTOR: TDK LAND LLC						
GRANTEE: VINTAGE AMELIA OWNE						

BUILDING NOTES

BUILDING DIMENSIONS

BAS=[YR=2019] W13 BAS=[YR=2019] W25 S24 E18 N2
CAN=[YR=2019] E20 N5 W20 S5$ N5 E7 N17$ S17 E13 N17$.

EXTRA FEATURES

LN	OB/XF CODE	DESCRIPTION	BLD	CAP	L	W	UNITS	UT	Adj R	ADJ UNIT PRICE	ORIG COND	YEAR ON	YEAR ACTUAL	Q	% COND	OB/XF MKT VALUE	NOTES
91	0810	CONCRETE A	10	0	0	0	159.00	SF	6.50	6.50	100	2020	2020	3	98	1,013	
92	0810	CONCRETE A	0	0	15	15	225.00	SF	6.50	6.50	100	2020	2020	3	98	1,433	
93	0810	CONCRETE A	0	0	20	16	320.00	SF	6.50	6.50	100	2020	2020	3	98	2,038	
94	0803	ASPHALT C	0	0	60	30	1,800.00	SF	2.00	2.00	100	2020	2020	3	84	3,024	
95	0425	CL FNC 8'	0	0	0	0	177.00	LF	10.65	10.65	100	2020	2020	3	95	1,791	
96	0463	FENCE GATE	0	0	0	0	1.00	UT	300.00	300.00	100	2020	2020	3	95	285	
97	0424	CL FNC 6'	0	0	0	0	1,254.00	LF	20.00	20.00	100	2020	2020	3	95	23,826	
98	0427	CL FNC 10'	0	0	0	0	394.00	LF	15.54	15.54	100	2020	2020	3	95	5,815	
99	0424	CL FNC 6'	0	0	0	0	489.00	LF	20.00	20.00	100	2020	2020	3	95	9,291	
100	0462	ST/AL FNC	0	0	107	6	642.00	SF	10.00	10.00	100	2020	2020	3	90	5,778	

TOTAL OB/XF 54,294

LAND DESCRIPTION

LN	USE CODE	CLS	LAND USE DESCRIPTION	CAP	RD	LOC ZONE	FRONT	DEPTH	TOT LND UTS	UNIT TYPE	DT	DPTH FACT	% COND	TOT ADJ	UNIT PRICE	ADJ UNIT PRICE	LAND VALUE	OTHER ADJUSTMENTS AND NOTES	YEAR	DENSITY	DECL	FRZ	YR	CONSRV

REVIEW DATE 03/04/2025 BY KW Total Acres: 0.00 Total Land Value: 0 Market: 0 Agricultural: 0 Common: 0 PRINTED 07/30/2025 BY SYS

ALL OF BLOCKS 197 & 235 & PT
OF BLOCK 211 IN OR 2568/1843 &
PT ABDN R/W PT OR 566/535-38

SREIT VINTAGE AMELIA LLC
C/O STARWOOD CAPITAL GROUP, 591 WEST PUTNAM AVE
GREENWICH, CT 06830

2025

00-00-31-1800-0197-0000

NASSAU COUNTY PROPERTY

BUILDING CHARACTERISTICS

ELEMENT	CD	CONSTRUCTION
Exterior Wall	10	ABOVE AVG 100
Roof Structur	04	WOOD TRUSS 100
Roof Cover	03	COMP SHNGL 100
Interior Wall	05	DRYWALL 100
Interior Floo	13	LVT/LAMNT 70
Interior Floo	14	CARPET 30
Air Condition	03	CENTRAL 100
Heating Type	04	AIR DUCTED 100
Bedrooms		2 100
Bathrooms		2 100
Frame	02	WOOD FRAME 100
Story Height		10 100
RMS		0 100
Units		24 100
Quality	04	Quality Level 04
DOR CODE	0300	MULTI-FAMILY
MAP NUM		MKT AREA 01
NEIGHBORHOOD/LOC	2002.00	

AREA TYPE	TOTAL GROSS AREA	PCT OF BASE	YEAR	TOT ADJ AREA	SUBAREA MARKET VALUE
BAS	2,359	100	2020	2,359	441,068
BAS	2,359	100	2020	2,359	441,068
BAS	3,126	100	2020	3,126	584,476
CAN	362	30	2020	109	20,380
CAN	362	30	2020	109	20,380
CAN	466	30	2020	140	26,176
CAN	466	30	2020	140	26,176
CAN	630	30	2020	189	35,338
CAN	630	30	2020	189	35,338
FOP	18	30	2020	5	935
TOTALS	28,147			25,200	4,711,712

MARKET ADJUSTMENTS

TYPE	MDL	EFF. AREA	TOT ADJ PTS	EFF. BASE RATE	REPL. COST NEW	AYB	EYB	ECON	FNCT		NORM	% COND
0302	03	25,200	109.7250	189.82	4,783,464	2020	2020	0	0	0	1.50	98.50

11 APART/LUX – 0% - 2023 Heated Area: 23527 HX Base Yr

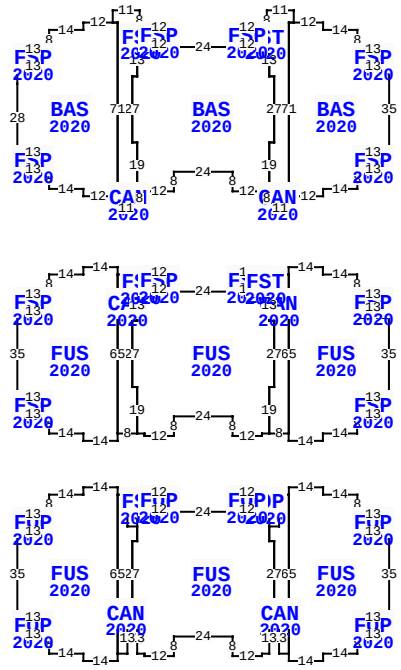

** This building has 39 Sub-Areas

2 VINTAGE WAY, FERNANDINA BEACH

BLD DATE	03/04/2025	KW	LGL DATE	
XF DATE	03/04/2025	KW	LAND DATE	04/23/2025 DC
INC DATE			AG DATE	

VALUATION SUMMARY

VALUATION BY	DIRECT_CAP
Tax Group: 2	Tax Dist:
BUILDING MARKET VALUE	48,171,155
TOTAL MARKET OB/XF VALUE	0
TOTAL LAND VALUE - MARKET	0
TOTAL MARKET VALUE	48,171,155
SOH/AGL Deduction	0
ASSESSED VALUE	48,171,155
TOTAL EXEMPTION VALUE	0
BASE TAXABLE VALUE	48,171,155
TOTAL JUST VALUE	48,171,155
NCON VALUE	0
INCOME VALUE	48,171,155
PREVIOUS YEAR MKT VALUE	47,922,312

PERMIT NUM	DESCRIPTION	AMT	ISSUED

SALES DATA

OFF RECORD Number	DATE	TYPE INST	Q / U	V / I	RSN CD	SALE PRICE
2568/1843	6/08/2022	SW	Q	I	01	66,933,000
GRANTOR: VINTAGE AMELIA OWNER						
GRANTEE: SREIT VINTAGE AMELI						
2200/0197	5/31/2018	SW	U	V	30	3,000,000
GRANTOR: TDK LAND LLC						
GRANTEE: VINTAGE AMELIA OWNE						

BUILDING NOTES

BUILDING DIMENSIONS

BAS=[YR=2020;ORIG=0,30] W13 N7 N8 W14 N3 W12 W2 S71 E2 E12 N3 E14 N8 N7 E13 N35 $
CAN=[YR=2020;ORIG=-39,12] N5 W11 S8 E1 S6 S13 E2 S27 W2 S19 W1 S8 E11 N5 W2 N71 E2 $
BAS=[YR=2020;ORIG=-47,34] W2 N13 W3 W12 S1 W24 N1 W12 W3 S13 W2 S27 E2 S19 E1 E2 S1 E12 N8 E24 S8 E12 N1 E2 E1 N19 E2 N27 $
CAN=[YR=2020;ORIG=-105,34] E2 N13 N6 E1 N8 W11 S5 E2 S71 W2 S5 E11 N8 W1 N19 W2 N27 $
BAS=[YR=2020;ORIG=-111,12] W2 W12 S3 W14 S8 S7 W13 S2 S5 S28 E13 S7 S8 E14 S3 E12 E2 N71 $
FSP=[YR=2020;ORIG=-13,23] E13 S7 W13 N7 $

EXTRA FEATURES

LN	OB/XF CODE	DESCRIPTION	BLD	CAP	L	W	UNITS	UT	Adj R	ADJ UNIT PRICE	ORIG COND	YEAR ON	YEAR ACTUAL	Q	% COND	OB/XF MKT VALUE	NOTES

LAND DESCRIPTION

TOTAL OB/XF 0

LN	USE CODE	CLS	LAND USE DESCRIPTION	CAP	RD	LOC ZONE	FRONT	DEPTH	TOT LND UTS	UNIT TYPE	DT	DPTH FACT	% COND	TOT ADJ	UNIT PRICE	ADJ UNIT PRICE	LAND VALUE	OTHER ADJUSTMENTS AND NOTES	YEAR	DENSITY	DECL	FRZ	YR	CONSRV

REVIEW DATE 03/04/2025 BY KW Total Acres: 0.00 Total Land Value: 0 Market: 0 Agricultural: 0 Common: 0 PRINTED 07/30/2025 BY SYS

ALL OF BLOCKS 197 & 235 & PT
OF BLOCK 211 IN OR 2568/1843 &
PT ABDN R/W PT OR 566/535-38

SREIT VINTAGE AMELIA LLC
C/O STARWOOD CAPITAL GROUP, 591 WEST PUTNAM AVE
GREENWICH, CT 06830

2025

00-00-31-1800-0197-0000

BUILDING CHARACTERISTICS

ELEMENT	CD	CONSTRUCTION
Exterior Wall	10	ABOVE AVG 100
Roof Structur	04	WOOD TRUSS 100
Roof Cover	03	COMP SHNGL 100
Interior Wall	05	DRYWALL 100
Interior Floo	13	LVT/LAMNT 70
Interior Floo	14	CARPET 30
Air Condition	03	CENTRAL 100
Heating Type	04	AIR DUCTED 100
Bedrooms		2 100
Bathrooms		2 100
Frame	02	WOOD FRAME 100
Story Height		10 100
RMS		0 100
Units		24 100
Quality	04	Quality Level 04

DOR CODE 0300 MULTI-FAMILY
MAP NUM | MKT AREA 01
NEIGHBORHOOD/LOC 2002.00

AREA TYPE	TOTAL GROSS AREA	PCT OF BASE	YEAR	TOT ADJ AREA	SUBAREA MARKET VALUE
BAS	2,359	100	2020	2,359	441,068
BAS	2,359	100	2020	2,359	441,068
BAS	3,126	100	2020	3,126	584,476
CAN	362	30	2020	109	20,380
CAN	362	30	2020	109	20,380
CAN	466	30	2020	140	26,176
CAN	466	30	2020	140	26,176
CAN	630	30	2020	189	35,338
CAN	630	30	2020	189	35,338
FOP	84	30	2020	25	4,675
TOTALS	28,152			25,210	4,713,582

MARKET ADJUSTMENTS

TYPE	MDL	EFF. AREA	TOT ADJ PTS	EFF. BASE RATE	REPL. COST NEW	AYB	EYB	ECON	FNCT		NORM	% COND
0302	03	25,210	109.7250	189.82	4,785,362	2020	2020	0	0	0	1.50	98.50

12 APART/LUX – 0% - 2023 Heated Area: 23532 HX Base Yr

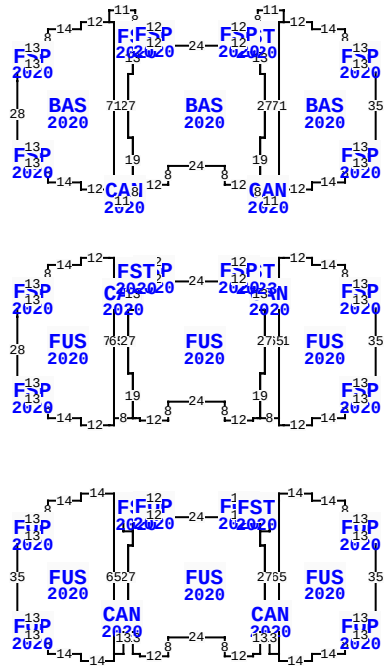

** This building has 39 Sub-Areas

2 VINTAGE WAY, FERNANDINA BEACH

BLD DATE	03/04/2025	KW	LGL DATE	
XF DATE	03/04/2025	KW	LAND DATE	04/23/2025 DC
INC DATE			AG DATE	

NASSAU COUNTY PROPERTY

VALUATION SUMMARY

VALUATION BY	DIRECT_CAP
Tax Group: 2	Tax Dist:
BUILDING MARKET VALUE	48,171,155
TOTAL MARKET OB/XF VALUE	0
TOTAL LAND VALUE - MARKET	0
TOTAL MARKET VALUE	48,171,155
SOH/AGL Deduction	0
ASSESSED VALUE	48,171,155
TOTAL EXEMPTION VALUE	0
BASE TAXABLE VALUE	48,171,155
TOTAL JUST VALUE	48,171,155
NCON VALUE	0
INCOME VALUE	48,171,155
PREVIOUS YEAR MKT VALUE	47,922,312

PERMIT NUM	DESCRIPTION	AMT	ISSUED

SALES DATA

OFF RECORD Number	DATE	TYPE INST	Q / U	V / I	RSN CD	SALE PRICE
2568/1843	6/08/2022	SW	Q	I	01	66,933,000
GRANTOR: VINTAGE AMELIA OWNER						
GRANTEE: SREIT VINTAGE AMELI						
2200/0197	5/31/2018	SW	U	V	30	3,000,000
GRANTOR: TDK LAND LLC						
GRANTEE: VINTAGE AMELIA OWNE						

BUILDING NOTES

BUILDING DIMENSIONS

BAS=[YR=2020;ORIG=0,30] W13 N7 N8 W14 N3 W12 W2 S71 E2 E12 N3 E14 N8 N7 E13 N35 $
CAN=[YR=2020;ORIG=-41,12] E2 N5 W11 S8 E1 S6 S13 E2 S27 W2 S19 W1 S8 E11 N5 W2 N71 $
BAS=[YR=2020;ORIG=-47,34] W2 N13 W3 W12 S1 W24 N1 W12 W3 S13 W2 S27 E2 S19 E1 E2 S1 E12 N8 E24 S8 E12 N1 E2 E1 N19 E2 N27 $
CAN=[YR=2020;ORIG=-105,34] E2 N13 N6 E1 N8 W11 S5 E2 S71 W2 S5 E11 N8 W1 N19 W2 N27 $
BAS=[YR=2020;ORIG=-113,12] E2 S71 W2 W12 N3 W14 N8 N7 W13 N28 N5 N2 E13 N7 N8 E14 N3 E12 $
FSP=[YR=2020;ORIG=-152,23] E13 S7 W13 N7 $

EXTRA FEATURES

LN	OB/XF CODE	DESCRIPTION	BLD	CAP	L	W	UNITS	UT	Adj R	ADJ UNIT PRICE	ORIG COND	YEAR ON	YEAR ACTUAL	Q	% COND	OB/XF MKT VALUE	NOTES

LAND DESCRIPTION

TOTAL OB/XF 0

LN	USE CODE	CLS	LAND USE DESCRIPTION	CAP	RD	LOC ZONE	FRONT	DEPTH	TOT LND UTS	UNIT TYPE	DT	DPTH FACT	% COND	TOT ADJ	UNIT PRICE	ADJ UNIT PRICE	LAND VALUE	OTHER ADJUSTMENTS AND NOTES	YEAR	DENSITY	DECL	FRZ	YR	CONSRV

REVIEW DATE 03/04/2025 BY KW Total Acres: 0.00 Total Land Value: 0 Market: 0 Agricultural: 0 Common: 0 PRINTED 07/30/2025 BY SYS

ALL OF BLOCKS 197 & 235 & PT
OF BLOCK 211 IN OR 2568/1843 &
PT ABDN R/W PT OR 566/535-38

SREIT VINTAGE AMELIA LLC
C/O STARWOOD CAPITAL GROUP, 591 WEST PUTNAM AVE
GREENWICH, CT 06830

2025

00-00-31-1800-0197-0000

NASSAU COUNTY PROPERTY

BUILDING CHARACTERISTICS

ELEMENT	CD	CONSTRUCTION
Exterior Wall	10	ABOVE AVG 100
Roof Structur	04	WOOD TRUSS 100
Roof Cover	03	COMP SHNGL 100
Interior Wall	05	DRYWALL 100
Interior Floo	13	LVT/LAMNT 70
Interior Floo	14	CARPET 30
Air Condition	03	CENTRAL 100
Heating Type	04	AIR DUCTED 100
Bedrooms		2 100
Bathrooms		2 100
Frame	02	WOOD FRAME 100
Story Height		10 100
RMS		0 100
Units		24 100
Quality	04	Quality Level 04

DOR CODE	0300	MULTI-FAMILY	
MAP NUM		MKT AREA	01
NEIGHBORHOOD/LOC	2002.00		

AREA TYPE	TOTAL GROSS AREA	PCT OF BASE	YEAR	TOT ADJ AREA	SUBAREA MARKET VALUE
BAS	1,551	100	2020	1,551	289,995
BAS	1,551	100	2020	1,551	289,995
BAS	4,563	100	2020	4,563	853,157
CAN	362	30	2020	109	20,380
CAN	362	30	2020	109	20,380
CAN	466	30	2020	140	26,176
CAN	466	30	2020	140	26,176
CAN	630	30	2020	189	35,338
CAN	630	30	2020	189	35,338
FOP	84	30	2020	25	4,675
TOTALS	27,037			24,405	4,563,069

MARKET ADJUSTMENTS

TYPE	MDL	EFF. AREA	TOT ADJ PTS	EFF. BASE RATE	REPL. COST NEW	AYB	EYB	ECON	FNCT		NORM	% COND
0302	03	24,405	109.7250	189.82	4,632,557	2020	2020	0	0	0	1.50	98.50

13 APART/LUX – 0% - 2023 Heated Area: 22995 HX Base Yr

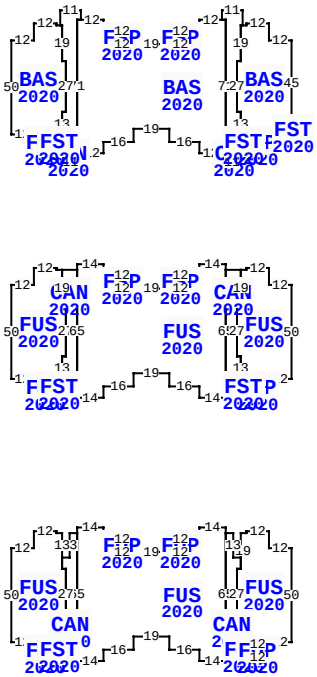

** This building has 34 Sub-Areas

2 VINTAGE WAY, FERNANDINA BEACH

BLD DATE	03/04/2025	KW	LGL DATE	
XF DATE	03/04/2025	KW	LAND DATE	04/23/2025 DC
INC DATE			AG DATE	

VALUATION SUMMARY

VALUATION BY	DIRECT_CAP
Tax Group: 2	Tax Dist:
BUILDING MARKET VALUE	48,171,155
TOTAL MARKET OB/XF VALUE	0
TOTAL LAND VALUE - MARKET	0
TOTAL MARKET VALUE	48,171,155
SOH/AGL Deduction	0
ASSESSED VALUE	48,171,155
TOTAL EXEMPTION VALUE	0
BASE TAXABLE VALUE	48,171,155
TOTAL JUST VALUE	48,171,155
NCON VALUE	0
INCOME VALUE	48,171,155
PREVIOUS YEAR MKT VALUE	47,922,312

PERMIT NUM	DESCRIPTION	AMT	ISSUED

SALES DATA

OFF RECORD Number	DATE	TYPE INST	Q / U	V / I	RSN CD	SALE PRICE
2568/1843	6/08/2022	SW	Q	I	01	66,933,000
GRANTOR: VINTAGE AMELIA OWNER						
GRANTEE: SREIT VINTAGE AMELI						
2200/0197	5/31/2018	SW	U	V	30	3,000,000
GRANTOR: TDK LAND LLC						
GRANTEE: VINTAGE AMELIA OWNE						

BUILDING NOTES

BUILDING DIMENSIONS

BAS=[YR=2020;ORIG=-35,19] W2 W12 S6 W4 S7 W12 W19 W12 N7 W4 N6 W12 W2 S71 E2 E12 N6 E16 N7 E19 S7 E16 S6 E12 E2 N71 $
FUS=[YR=2020;ORIG=-35,149] S3 S65 S3 W14 N6 W16 N7 W19 S7 W16 S6 W14 N3 N65 N3 E14 S6 E4 S7 E12 E19 E12 N7 E4 N6 E14 $
BAS=[YR=2020;ORIG=0,30] W12 N9 W12 S1 W2 W1 S19 W2 S27 E2 S13 E3 E12 N1 E12 N5 N45 $
BAS=[YR=2020;ORIG=-122,22] W1 W2 N1 W12 S9 W12 S50 E12 S1 E12 E3 N13 E2 N27 W2 N19 $
FUS=[YR=2020;ORIG=0,160] W12 N9 W12 S1 W3 S19 W2 S27 E2 S13 E3 E12 N1 E12 N50 $
FUS=[YR=2020;ORIG=-122,152] W3 N1 W12 S9 W12 S50 E12 S1 E12 E3 N13 E2 N27 W2 N19 $

EXTRA FEATURES

LN	OB/XF CODE	DESCRIPTION	BLD	CAP	L	W	UNITS	UT	Adj R	ADJ UNIT PRICE	ORIG COND	YEAR ON	YEAR ACTUAL	Q	% COND	OB/XF MKT VALUE	NOTES

LAND DESCRIPTION

TOTAL OB/XF 0

LN	USE CODE	CLS	LAND USE DESCRIPTION	CAP	RD	LOC ZONE	FRONT	DEPTH	TOT LND UTS	UNIT TYPE	DT	DPTH FACT	% COND	TOT ADJ	UNIT PRICE	ADJ UNIT PRICE	LAND VALUE	OTHER ADJUSTMENTS AND NOTES	YEAR	DENSITY	DECL	FRZ	YR	CONSRV

REVIEW DATE 03/04/2025 BY KW Total Acres: 0.00 Total Land Value: 0 Market: 0 Agricultural: 0 Common: 0 PRINTED 07/30/2025 BY SYS

ALL OF BLOCKS 197 & 235 & PT
OF BLOCK 211 IN OR 2568/1843 &
PT ABDN R/W PT OR 566/535-38

SREIT VINTAGE AMELIA LLC
C/O STARWOOD CAPITAL GROUP, 591 WEST PUTNAM AVE
GREENWICH, CT 06830

2025

00-00-31-1800-0197-0000

BUILDING CHARACTERISTICS

ELEMENT	CD	CONSTRUCTION
Exterior Wall	10	ABOVE AVG 100
Roof Structur	04	WOOD TRUSS 100
Roof Cover	03	COMP SHNGL 100
Interior Wall	05	DRYWALL 100
Interior Floo	13	LVT/LAMNT 70
Interior Floo	14	CARPET 30
Air Condition	03	CENTRAL 100
Heating Type	04	AIR DUCTED 100
Bedrooms		2 100
Bathrooms		2 100
Frame	02	WOOD FRAME 100
Story Height		10 100
RMS		0 100
Units		2 100

Quality	04	Quality Level 04
DOR CODE	0300	MULTI-FAMILY
MAP NUM		MKT AREA 01
NEIGHBORHOOD/LOC	2002.00	

AREA TYPE	TOTAL GROSS AREA	PCT OF BASE	YEAR	TOT ADJ AREA	SUBAREA MARKET VALUE
BAS	92	100	2020	92	18,651
BAS	92	100	2020	92	18,651
CAN	45	30	2020	14	2,838
CAN	45	30	2020	14	2,838
FGR	1,760	55	2020	968	196,236
FSP	99	55	2020	54	10,947
FSP	99	55	2020	54	10,947
FST	45	55	2020	25	5,068
FST	473	55	2020	260	52,708
FUS	1,105	100	2020	1,105	224,009
TOTALS	4,960			3,783	766,900

MARKET ADJUSTMENTS

TYPE	MDL	EFF. AREA	TOT ADJ PTS	EFF. BASE RATE	REPL. COST NEW	AYB	EYB	ECON	FNCT		NORM	% COND
0302	03	3,783	118.9650	205.81	778,579	2020	2020	0	0	0	1.50	98.50

14 APART/LUX – 0% - 2023 Heated Area: 2394 HX Base Yr

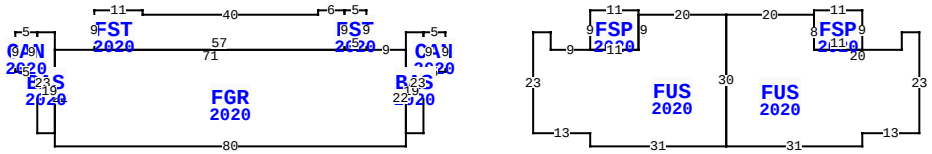

** This building has 11 Sub-Areas

2 VINTAGE WAY, FERNANDINA BEACH

BLD DATE	03/04/2025	KW	LGL DATE	
XF DATE	03/04/2025	KW	LAND DATE	04/23/2025 DC
INC DATE			AG DATE	

NASSAU COUNTY PROPERTY

VALUATION SUMMARY

VALUATION BY	DIRECT_CAP
Tax Group: 2	Tax Dist:
BUILDING MARKET VALUE	48,171,155
TOTAL MARKET OB/XF VALUE	0
TOTAL LAND VALUE - MARKET	0
TOTAL MARKET VALUE	48,171,155
SOH/AGL Deduction	0
ASSESSED VALUE	48,171,155
TOTAL EXEMPTION VALUE	0
BASE TAXABLE VALUE	48,171,155
TOTAL JUST VALUE	48,171,155
NCON VALUE	0
INCOME VALUE	48,171,155
PREVIOUS YEAR MKT VALUE	47,922,312

PERMIT NUM	DESCRIPTION	AMT	ISSUED

SALES DATA

OFF RECORD Number	DATE	TYPE INST	Q / U	V / I	RSN CD	SALE PRICE
2568/1843	6/08/2022	SW	Q	I	01	66,933,000
GRANTOR: VINTAGE AMELIA OWNER						
GRANTEE: SREIT VINTAGE AMELI						
2200/0197	5/31/2018	SW	U	V	30	3,000,000
GRANTOR: TDK LAND LLC						
GRANTEE: VINTAGE AMELIA OWNE						

BUILDING NOTES

BUILDING DIMENSIONS

CAN=[YR=2020] W5 BAS=[YR=2020] W4 S4 FGR=[YR=2020] W9 FST=[YR=2020] N9 W5 FST=[YR=2020] W6 S1 W40 N1 W11 S9 E57 N9$ S9 E5$ W71 BAS=[YR=2020] N4 W4 CAN=[YR=2020] W5 S9 E5 N9$ S23 E4 N19$ S22 E80 N22$ S19 E4 N23$ S9 E5 N9$ PTR= E20 FUS=[YR=2020] E4 S4 E9 FSP=[YR=2020] N9 E11 S9 W11$ E11 N8 E20 FUS=[YR=2020] E20 FSP=[YR=2020] N1 E11 S9 W11 N8$ S8 E20 N4 E4 S23 W13 S3 W31 N30$ S30 W31 N3 W13 N23$ W20$.

EXTRA FEATURES

L N	OB/XF CODE	DESCRIPTION	BLD	CAP	L	W	UNITS	UT	Adj R	ADJ UNIT PRICE	ORIG COND	YEAR ON	YEAR ACTUAL	Q	% COND	OB/XF MKT VALUE	NOTES

LAND DESCRIPTION

TOTAL OB/XF 0

L N	USE CODE	CLS	LAND USE DESCRIPTION	CAP	R D	LOC ZONE	FRONT	DEPTH	TOT LND UTS	UNIT TYPE	D T	DPTH FACT	% COND	TOT ADJ	UNIT PRICE	ADJ UNIT PRICE	LAND VALUE	OTHER ADJUSTMENTS AND NOTES	YEAR	DENSITY	DECL	FRZ	YR	CONSRV

REVIEW DATE 03/04/2025 BY KW Total Acres: 0.00 Total Land Value: 0 Market: 0 Agricultural: 0 Common: 0 PRINTED 07/30/2025 BY SYS

ALL OF BLOCKS 197 & 235 & PT
OF BLOCK 211 IN OR 2568/1843 &
PT ABDN R/W PT OR 566/535-38

SREIT VINTAGE AMELIA LLC
C/O STARWOOD CAPITAL GROUP, 591 WEST PUTNAM AVE
GREENWICH, CT 06830

2025

00-00-31-1800-0197-0000

NASSAU COUNTY PROPERTY

BUILDING CHARACTERISTICS

ELEMENT	CD	CONSTRUCTION
Exterior Wall	10	ABOVE AVG 100
Roof Structur	04	WOOD TRUSS 100
Roof Cover	03	COMP SHNGL 100
Interior Wall	05	DRYWALL 100
Interior Floo	13	LVT/LAMNT 70
Interior Floo	14	CARPET 30
Air Condition	03	CENTRAL 100
Heating Type	04	AIR DUCTED 100
Bedrooms		2 100
Bathrooms		2 100
Frame	02	WOOD FRAME 100
Story Height		10 100
RMS		0 100
Units		24 100
Quality	04	Quality Level 04

DOR CODE 0300 MULTI-FAMILY
MAP NUM | MKT AREA 01
NEIGHBORHOOD/LOC 2002.00

AREA TYPE	TOTAL GROSS AREA	PCT OF BASE	YEAR	TOT ADJ AREA	SUBAREA MARKET VALUE
BAS	1,551	100	2020	1,551	289,995
BAS	1,551	100	2020	1,551	289,995
BAS	4,563	100	2020	4,563	853,157
CAN	362	30	2020	109	20,380
CAN	362	30	2020	109	20,380
CAN	466	30	2020	140	26,176
CAN	466	30	2020	140	26,176
CAN	630	30	2020	189	35,338
CAN	630	30	2020	189	35,338
FOP	84	30	2020	25	4,675
TOTALS	27,037			24,405	4,563,069

MARKET ADJUSTMENTS

TYPE	MDL	EFF. AREA	TOT ADJ PTS	EFF. BASE RATE	REPL. COST NEW	AYB	EYB	ECON	FNCT		NORM	% COND
0302	03	24,405	109.7250	189.82	4,632,557	2020	2020	0	0	0	1.50	98.50

15 APART/LUX – 0% - 2023 Heated Area: 22995 HX Base Yr

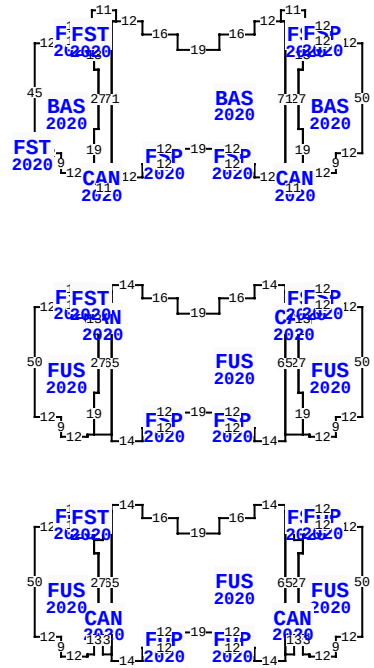

** This building has 34 Sub-Areas

2 VINTAGE WAY, FERNANDINA BEACH

BLD DATE	03/04/2025	KW	LGL DATE	
XF DATE	03/04/2025	KW	LAND DATE	04/23/2025 DC
INC DATE			AG DATE	

VALUATION SUMMARY

VALUATION BY	DIRECT_CAP
Tax Group: 2	Tax Dist:
BUILDING MARKET VALUE	48,171,155
TOTAL MARKET OB/XF VALUE	0
TOTAL LAND VALUE - MARKET	0
TOTAL MARKET VALUE	48,171,155
SOH/AGL Deduction	0
ASSESSED VALUE	48,171,155
TOTAL EXEMPTION VALUE	0
BASE TAXABLE VALUE	48,171,155
TOTAL JUST VALUE	48,171,155
NCON VALUE	0
INCOME VALUE	48,171,155
PREVIOUS YEAR MKT VALUE	47,922,312

PERMIT NUM	DESCRIPTION	AMT	ISSUED

SALES DATA

OFF RECORD Number	DATE	TYPE INST	Q / U	V / I	RSN CD	SALE PRICE
2568/1843	6/08/2022	SW	Q	I	01	66,933,000
GRANTOR: VINTAGE AMELIA OWNER						
GRANTEE: SREIT VINTAGE AMELI						
2200/0197	5/31/2018	SW	U	V	30	3,000,000
GRANTOR: TDK LAND LLC						
GRANTEE: VINTAGE AMELIA OWNE						

BUILDING NOTES

BUILDING DIMENSIONS

BAS=[YR=2020;ORIG=0,30] W12 N1 W12 W3 S13 W2 S27 E2 S19 E1 E2 S1 E12 N9 E12 N50 $
CAN=[YR=2020;ORIG=-29,42] E2 N13 N6 E1 N8 W11 S5 E2 S71 W2 S5 E11 N8 W1 N19 W2 N27 $
BAS=[YR=2020;ORIG=-35,20] W2 W12 S6 W16 S7 W19 N7 W16 N6 W12 W2 S71 E2 E12 N6 E4 N7 E12 E19 E12 S7 E4 S6 E12 E2 N71 $
CAN=[YR=2020;ORIG=-112,20] N5 W11 S8 E1 S6 S13 E2 S27 W2 S19 W1 S8 E11 N5 W2 N71 E2 $
BAS=[YR=2020;ORIG=-120,42] W2 N13 W3 W12 S1 W12 S45 S5 E12 S9 E12 N1 E2 E1 N19 E2 N27 $
FST=[YR=2020;ORIG=-151,75] E2 S5 W2 N5 $
FSP=[YR=2020;ORIG=-137,22] E12 S7 W12 N7 $

EXTRA FEATURES

LN	OB/XF CODE	DESCRIPTION	BLD	CAP	L	W	UNITS	UT	Adj R	ADJ UNIT PRICE	ORIG COND	YEAR ON	YEAR ACTUAL	Q	% COND	OB/XF MKT VALUE	NOTES

LAND DESCRIPTION

TOTAL OB/XF 0

LN	USE CODE	CLS	LAND USE DESCRIPTION	CAP	RD	LOC ZONE	FRONT	DEPTH	TOT LND UTS	UNIT TYPE	DT	DPTH FACT	% COND	TOT ADJ	UNIT PRICE	ADJ UNIT PRICE	LAND VALUE	OTHER ADJUSTMENTS AND NOTES	YEAR	DENSITY	DECL	FRZ	YR	CONSRV

REVIEW DATE 03/04/2025 BY KW Total Acres: 0.00 Total Land Value: 0 Market: 0 Agricultural: 0 Common: 0 PRINTED 07/30/2025 BY SYS

ALL OF BLOCKS 197 & 235 & PT
OF BLOCK 211 IN OR 2568/1843 &
PT ABDN R/W PT OR 566/535-38

SREIT VINTAGE AMELIA LLC
C/O STARWOOD CAPITAL GROUP, 591 WEST PUTNAM AVE
GREENWICH, CT 06830

2025

00-00-31-1800-0197-0000

NASSAU COUNTY PROPERTY

BUILDING CHARACTERISTICS

ELEMENT	CD	CONSTRUCTION
Exterior Wall	10	ABOVE AVG 50
Exterior Wall	21	STONE 50
Roof Structur	04	WOOD TRUSS 100
Roof Cover	03	COMP SHNGL 100
Interior Wall	05	DRYWALL 100
Interior Floo	03	CONC FINSH 100
Air Condition	01	NONE 100
Heating Type	01	NONE 100
Bedrooms		0 100
Bathrooms		0 100
Frame	03	MASONRY 100
Story Height		13 100
RMS		1 100
Units		0 100
Quality	04	Quality Level 04

DOR CODE	0300	MULTI-FAMILY	
MAP NUM		MKT AREA	01
NEIGHBORHOOD/LOC	2002.00		

AREA TYPE	TOTAL GROSS AREA	PCT OF BASE	YEAR	TOT ADJ AREA	SUBAREA MARKET VALUE
BAS	238	100	2019	238	7,675
FCP	154	25	2019	38	1,226
PTO	240	5	2019	12	387
STP	144	10	2019	14	452
TOTALS	776			302	9,739

MARKET ADJUSTMENTS

TYPE	MDL	EFF. AREA	TOT ADJ PTS	EFF. BASE RATE	REPL. COST NEW	AYB	EYB	ECON	FNCT		NORM	% COND
0304	03	302	102.2868	32.99	9,963	2019	2019	0	0	0	2.25	97.75

16 APART/GAR – 0% - 2023 Heated Area: 238 HX Base Yr

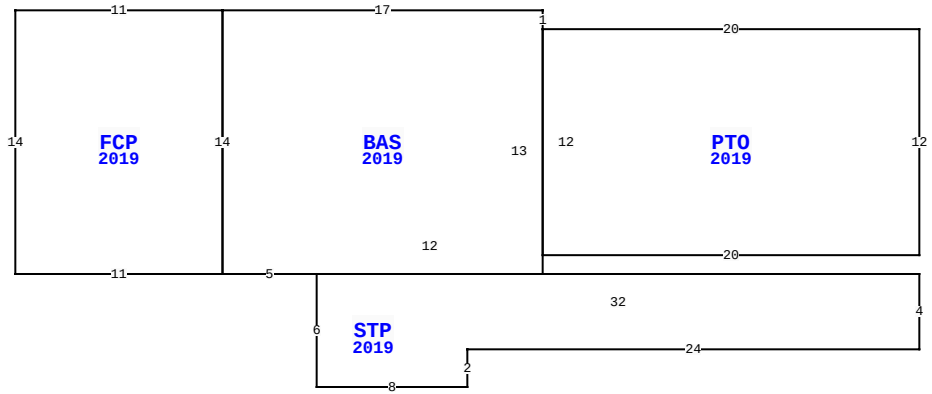

BLD DATE	03/04/2025	KW	LGL DATE		
XF DATE	03/04/2025	KW	LAND DATE	04/23/2025	DC
INC DATE			AG DATE		

2 VINTAGE WAY, FERNANDINA BEACH

VALUATION SUMMARY

VALUATION BY	DIRECT_CAP
Tax Group: 2	Tax Dist:
BUILDING MARKET VALUE	48,171,155
TOTAL MARKET OB/XF VALUE	0
TOTAL LAND VALUE - MARKET	0
TOTAL MARKET VALUE	48,171,155
SOH/AGL Deduction	0
ASSESSED VALUE	48,171,155
TOTAL EXEMPTION VALUE	0
BASE TAXABLE VALUE	48,171,155
TOTAL JUST VALUE	48,171,155
NCON VALUE	0
INCOME VALUE	48,171,155
PREVIOUS YEAR MKT VALUE	47,922,312

PERMIT NUM	DESCRIPTION	AMT	ISSUED

SALES DATA

OFF RECORD Number	DATE	TYPE INST	Q / U	V / I	RSN CD	SALE PRICE
2568/1843	6/08/2022	SW	Q	I	01	66,933,000
GRANTOR: VINTAGE AMELIA OWNER						
GRANTEE: SREIT VINTAGE AMELI						
2200/0197	5/31/2018	SW	U	V	30	3,000,000
GRANTOR: TDK LAND LLC						
GRANTEE: VINTAGE AMELIA OWNE						

BUILDING NOTES

BUILDING DIMENSIONS

PTO=[YR=2019] W20 BAS=[YR=2019] N1 W17 FCP=[YR=2019] W11 S14 E11 N14$ S14 E5 STP=[YR=2019] S6 E8 N2 E24 N4 W32$ E12 N13$ S12 E20 N12$.

EXTRA FEATURES

LN	OB/XF CODE	DESCRIPTION	BLD	CAP	L	W	UNITS	UT	Adj R	ADJ UNIT PRICE	ORIG COND	YEAR ON	YEAR ACTUAL	Q	% COND	OB/XF MKT VALUE	NOTES

LAND DESCRIPTION

TOTAL OB/XF 0

LN	USE CODE	CLS	LAND USE DESCRIPTION	CAP	RD	LOC ZONE	FRONT	DEPTH	TOT LND UTS	UNIT TYPE	DT	DPTH FACT	% COND	TOT ADJ	UNIT PRICE	ADJ UNIT PRICE	LAND VALUE	OTHER ADJUSTMENTS AND NOTES	YEAR	DENSITY	DECL	FRZ	YR	CONSRV

REVIEW DATE 03/04/2025 BY KW Total Acres: 0.00 Total Land Value: 0 Market: 0 Agricultural: 0 Common: 0 PRINTED 07/30/2025 BY SYS