PT BLK'S 193,200 & PT OF ABND
NECTARINE ST IN OR 2718/1484
CITY OF FDNA BEACH S/D OF

WATSON JOHN P L/E/
2943 AMELIA RD
FERNANDINA BEACH, FL 32034

2025

00-00-31-1800-0193-0042

NASSAU COUNTY PROPERTY

BUILDING CHARACTERISTICS

ELEMENT	CD	CONSTRUCTION
Exterior Wall	05	AVERAGE 100
Roof Structur	03	GABLE/HIP 100
Roof Cover	03	COMP SHNGL 100
Interior Wall	04	PLYWOOD 50
Interior Wall	05	DRYWALL 50
Interior Floo	14	CARPET 80
Interior Floo	11	CLAY TILE 20
Air Condition	03	CENTRAL 100
Heating Type	04	AIR DUCTED 100
Bedrooms		3 100
Bathrooms		2 100
Frame	02	WOOD FRAME 100
Stories	1.	1. 100
Units		0 100
BUD8 Adjustme	05	DIST 1A 100
Occupancy	00	NONE 100
Quality	02	Quality Level 02
DOR CODE	0100	SINGLE FAMILY
MAP NUM		MKT AREA 02
NEIGHBORHOOD/LOC	2017.00	

AREA TYPE	TOTAL GROSS AREA	PCT OF BASE	YEAR	TOT ADJ AREA	SUBAREA MARKET VALUE
BAS	807	100	1993	807	74,162
BAS	657	100	2008	657	60,377
FOP	80	30	1993	24	2,205
FSP	240	40	2008	96	8,822
STR	20	10	2008	2	184
STR	28	10	2008	3	276
UCP	135	20	1993	27	2,482
TOTALS	1,967			1,616	148,508

MARKET ADJUSTMENTS

TYPE	MDL	EFF. AREA	TOT ADJ PTS	EFF. BASE RATE	REPL. COST NEW	AYB	EYB	ECON	FNCT		NORM	% COND
0100	01	1,616	107.1714	107.17	173,187	1938	1995	0	0	0	14.25	85.75

1 SINGLE FAM – 0% - 0 Heated Area: 1464 HX Base Yr

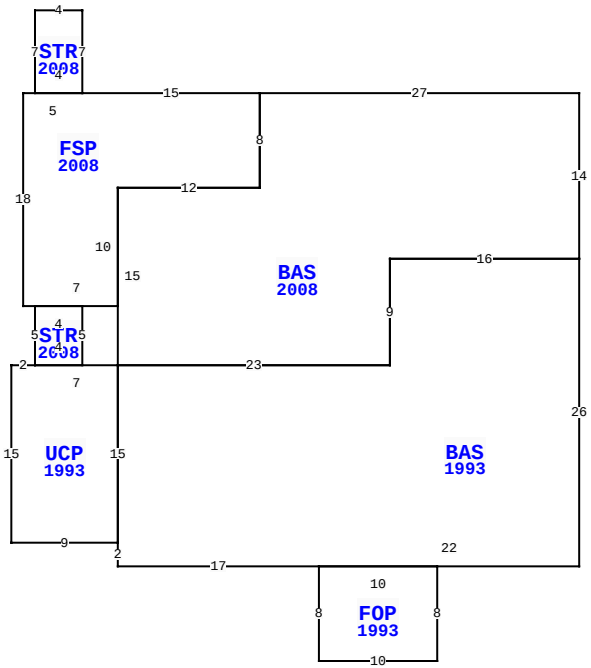

1330 S 6TH ST, FERNANDINA BEACH

BLD DATE		LGL DATE	
XF DATE		LAND DATE	05/06/2025 MLU
INC DATE		AG DATE	

VALUATION SUMMARY

VALUATION BY	STANDARD
Tax Group: 8	Tax Dist:
BUILDING MARKET VALUE	148,508
TOTAL MARKET OB/XF VALUE	6,200
TOTAL LAND VALUE - MARKET	110,500
TOTAL MARKET VALUE	265,208
SOH/AGL Deduction	49,625
ASSESSED VALUE	215,583
TOTAL EXEMPTION VALUE	0
BASE TAXABLE VALUE	215,583
TOTAL JUST VALUE	265,208
NCON VALUE	0
INCOME VALUE	
PREVIOUS YEAR MKT VALUE	233,542

PERMIT NUM	DESCRIPTION	AMT	ISSUED
M13685	H/AC	0	03/01/2008
B20993	ADDITION	68,000	01/01/2008
R991634	REPAIR/RRF	0	03/09/1999
8251	CARPORT	5,500	07/21/1992

SALES DATA

OFF RECORD Number	DATE	TYPE INST	Q / U	V / I	RSN CD	SALE PRICE
2718/1484	6/13/2024	WD	U	I	11	100
GRANTOR: WATSON JOHN P						
GRANTEE: HODZ LESLIE WATSON						
2717/1264	6/10/2024	WD	U	I	11	100
GRANTOR: WATSON JOHN P						
GRANTEE: HODZ LESLIE WATSON						

BUILDING NOTES

BUILDING DIMENSIONS

BAS=[YR=2008] W27 FSP=[YR=2008] W15 STR=[YR=2008] N7W4S7E4$ W5 S18 E1 STR=[YR=2008] S5 UCP=[YR=1993] W2S15E9 BAS=[YR=1993] S2E17 FOP=[YR=1993] S8E10N8 W10$ E22N26W16S9W23S15$ N15W7$ E4N5W4$ E7N10E12N8$ S8W12S15 E23N9E16N14$.

EXTRA FEATURES

LN	OB/XF CODE	DESCRIPTION	BLD	CAP	L	W	UNITS	UT	Adj R	ADJ UNIT PRICE	ORIG COND	YEAR ON	YEAR ACTUAL	Q	% COND	OB/XF MKT VALUE	NOTES
1	0810	CONCRETE A	0	0	32	10	320.00	SF	6.50	6.50	100	1992	1992	3	62	1,290	
2	0810	CONCRETE A	0	0	17	3	51.00	SF	6.50	6.50	100	1992	1992	3	62	206	
3	0510	GARAGE WD-	0	0	14	20	280.00	SF	35.00	35.00	100	2008	2008	3	48	4,704	

LAND DESCRIPTION

TOTAL OB/XF 6,200

LN	USE CODE	CLS	LAND USE DESCRIPTION	CAP	RD	LOC ZONE	FRONT	DEPTH	TOT LND UTS	UNIT TYPE	DT	DPTH FACT	% COND	TOT ADJ	UNIT PRICE	ADJ UNIT PRICE	LAND VALUE	OTHER ADJUSTMENTS AND NOTES	YEAR	DENSITY	DECL	FRZ	YR	CONSRV
1	000100	C	RES	0	0006	RSF-2	85.00	100.00	85.00	FF		1.00	1.00	1.00	1,300.00	1,300.00	110,500							

REVIEW DATE 05/12/2019 BY KBA Total Acres: 0.00 Total Land Value: 110,500 Market: 0 Agricultural: 0 Common: 110,500 PRINTED 07/30/2025 BY SYS