BLOCK 54 LOTS 1 & N85' LOT 8
CITY OF FDNA BEACH

LAUB JOHN A & LISA R
102 S 10TH ST
FERNANDINA BEACH, FL 32034

2025

00-00-31-1800-0054-0010

BUILDING CHARACTERISTICS

ELEMENT	CD	CONSTRUCTION
Exterior Wall	12	CEDAR 100
Roof Structur	03	GABLE/HIP 100
Roof Cover	12	MODULAR MT 100
Interior Wall	03	PLASTER 100
Interior Floo	12	HARDWOOD 100
Air Condition	03	CENTRAL 100
Heating Type	04	AIR DUCTED 100
Bedrooms		4 100
Bathrooms		3 100
Frame	02	WOOD FRAME 100
Stories	3.	3. 100
Units		0 100
BUD8 Adjustme	02	DIST FB 100
Occupancy	00	NONE 100
Quality	04	Quality Level 04

DOR CODE 0800 MULTI-FAMILY
MAP NUM | MKT AREA 01
NEIGHBORHOOD/LOC 1005.00

AREA TYPE	TOTAL GROSS AREA	PCT OF BASE	YEAR	TOT ADJ AREA	SUBAREA MARKET VALUE
APT	1,312	100	1993	1,312	217,000
FOP	100	30	1993	30	4,962
FOP	256	30	1993	77	12,736
HXB	576	100	1993	576	95,268
HXB	1,312	100	1993	1,312	217,000
HXP	40	30	1993	12	1,985
HXP	256	30	1993	77	12,736
HXP	300	30	1993	90	14,886
TOTALS	4,152			3,486	576,573

MARKET ADJUSTMENTS

TYPE	MDL	EFF. AREA	TOT ADJ PTS	EFF. BASE RATE	REPL. COST NEW	AYB	EYB	ECON	FNCT	PD	NORM	% COND
2700	01	3,486	114.9540	151.74	528,966	1863	1980	0	0	109	22.00	109.00

1 DUPLEX – 100% - 2025 Heated Area: 3200 HX Base Yr 2025

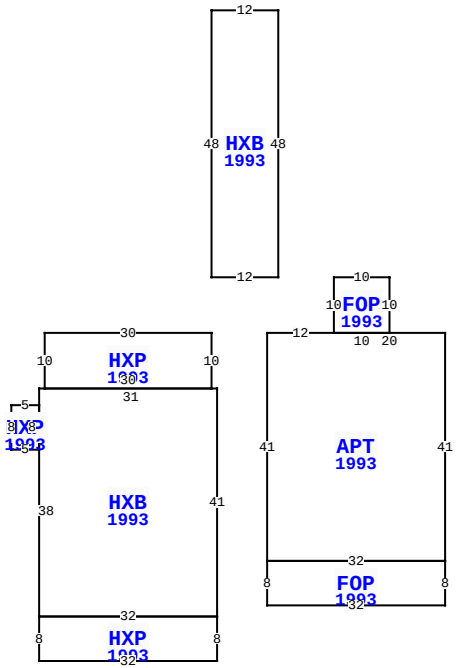

102 S 10TH ST, FERNANDINA BEACH

BLD DATE		LGL DATE	
XF DATE		LAND DATE	04/15/2025 MLU
INC DATE		AG DATE	

NASSAU COUNTY PROPERTY

PAGE 1 of 2 2

VALUATION SUMMARY

VALUATION BY		STANDARD
Tax Group: 2	Tax Dist:	
BUILDING MARKET VALUE		659,021
TOTAL MARKET OB/XF VALUE		93,856
TOTAL LAND VALUE - MARKET		555,000
TOTAL MARKET VALUE		1,307,877
SOH/AGL Deduction		0
ASSESSED VALUE		1,307,877
TOTAL EXEMPTION VALUE	HX HB	50,722
BASE TAXABLE VALUE		1,257,155
TOTAL JUST VALUE		1,307,877
NCON VALUE		172,963
INCOME VALUE		
PREVIOUS YEAR MKT VALUE		1,012,028

PERMIT NUM	DESCRIPTION	AMT	ISSUED
2023-0729			10/16/2024
BLDR-2024-0	INTERIOR RENOVATI	250,000	03/04/2024
2023-0729	FDG	400,000	12/21/2023
20011717	200 AMP CHANGE OU	1,000	07/26/2001
972338	ELEC OTHER	1,000	12/03/1997
7627	REPAIR/RRF	1,500	04/07/1993

SALES DATA

OFF RECORD Number	DATE	TYPE INST	Q U	V I	RSN CD	SALE PRICE
2628/0273	3/30/2023	WD	Q	I	01	1,251,000
GRANTOR: PHILLIPS FAMILY TRUST						
GRANTEE: LAUB JOHN A & LISA						
2460/1321	5/11/2021	WD	Q	I	01	850,000
GRANTOR: STEWART MONTIETH H						
GRANTEE: PHILLIPS FAMILY TRU						

BUILDING NOTES

BUILDING DIMENSIONS

HXP=[YR=1993] W30 S10 HXB=[YR=1993] W1 S3 HXP=[YR=1993] W5 S8 E5 N8$ S38 HXP=[YR=1993] S8 E32 N8 W32$ E32 N41 W31$ E30 N10$PTR= E10 APT=[YR=1993] E12 FOP=[YR=1993] N10 E10 S10 W10$ E20 S41 FOP=[YR=1993] S8 W32 N8 E32$ W32 N41$ W10$ PTR= N10 HXB=[YR=1993] E12 N48 W12 S48$ S10$.

EXTRA FEATURES

LN	OB/XF CODE	DESCRIPTION	BLD	CAP	L	W	UNITS	UT	Adj R	ADJ UNIT PRICE	ORIG COND	YEAR ON	YEAR ACTUAL	Q	% COND	OB/XF MKT VALUE	NOTES
1	0504	FP-ELECTRI	0	100	0	0	2.00	UT	2,000.00	2,000.00	100	1910	1910	3	20	800	
2	0825	BRICK	0	100	31	4	124.00	SF	12.50	12.50	100	1980	1980	3	72	1,116	
3	0825	BRICK	0	100	4	9	36.00	SF	12.50	12.50	100	1950	1950	3	20	90	
4	0825	BRICK	0	100	3	10	30.00	SF	12.50	12.50	100	1950	1950	3	20	75	
5	0940	SHEDS/PORT	0	100	12	10	120.00	SF	30.00	30.00	100	2009	2009	3	35	1,260	
6	0825	BRICK	0	100	0	0	690.00	SF	12.50	12.50	100	2025	2024		100	8,625	
7	0462	ST/AL FNC	0	100	0	0	1,950.00	SF	10.00	10.00	100	2025	2024		100	19,500	
8	0861	POOL GUNIT	0	100	0	0	508.00	SF	85.00	85.00	100	2025	2024		100	43,180	
9	0871	POOL HTR R	0	100	0	0	1.00	UT	2,000.00	2,000.00	100	2025	2024		100	2,000	
10	0855	CONC PAVER	0	100	0	0	1,217.00	SF	10.00	10.00	100	2025	2024		100	12,170	

TOTAL OB/XF 88,816

LAND DESCRIPTION

LN	USE CODE	CLS	LAND USE DESCRIPTION	CAP	RD	LOC ZONE	FRONT	DEPTH	TOT LND UTS	UNIT TYPE	DT	DPTH FACT	% COND	TOT ADJ	UNIT PRICE	ADJ UNIT PRICE	LAND VALUE	OTHER ADJUSTMENTS AND NOTES	YEAR	DENSITY	DECL	FRZ	YR	CONSRV
1	000800	C	MULTI-FAMILY	100	0003	C-3	0.00	0.00	18,500.00	SF		1.00	1.00	1.00	30.00	30.00	555,000							

REVIEW DATE 11/26/2024 BY DJ Total Acres: 0.00 Total Land Value: 555,000 Market: 0 Agricultural: 0 Common: 555,000 PRINTED 07/30/2025 BY SYS

BLOCK 54 LOTS 1 & N85' LOT 8
CITY OF FDNA BEACH

LAUB JOHN A & LISA R
102 S 10TH ST
FERNANDINA BEACH, FL 32034

2025

00-00-31-1800-0054-0010

NASSAU COUNTY PROPERTY

BUILDING CHARACTERISTICS

ELEMENT	CD	CONSTRUCTION
Exterior Wall	31	HARDIE BRD 100
Roof Structur	03	GABLE/HIP 100
Roof Cover	03	COMP SHNGL 100
Interior Wall	05	DRYWALL 100
Interior Floo	13	LVT/LAMNT 90
Interior Floo	11	CLAY TILE 10
Air Condition	03	CENTRAL 100
Heating Type	04	AIR DUCTED 100
Bedrooms		1 100
Bathrooms		1 100
Frame	02	WOOD FRAME 100
Stories	2.	2. 100
Units		0 100
Occupancy	00	NONE 100
Quality	04	Quality Level 04
DOR CODE	0800	MULTI-FAMILY
MAP NUM		MKT AREA 01
NEIGHBORHOOD/LOC	1005.00	

AREA TYPE	TOTAL GROSS AREA	PCT OF BASE	YEAR	TOT ADJ AREA	SUBAREA MARKET VALUE
BAS	600	100	2025	600	52,182
FGR	616	55	2025	339	29,483
STR	90	10	2025	9	783
TOTALS	1,306			948	82,448

MARKET ADJUSTMENTS

TYPE	MDL	EFF. AREA	TOT ADJ PTS	EFF. BASE RATE	REPL. COST NEW	AYB	EYB	ECON	FNCT		NORM	% COND
0150	11	948	164.0866	86.97	82,448	2024	2024	0	0	0	0.00	100.00

2 ACCESORY U – 100% - 2025 Heated Area: 600 HX Base Yr 2025

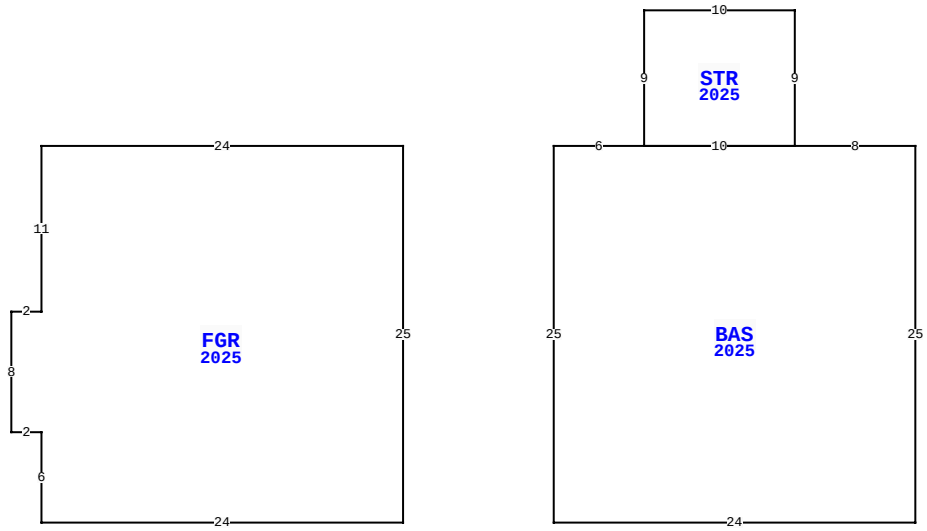

102 S 10TH ST, FERNANDINA BEACH

BLD DATE		LGL DATE	
XF DATE		LAND DATE	04/15/2025 MLU
INC DATE		AG DATE	

VALUATION SUMMARY

VALUATION BY		STANDARD
Tax Group: 2	Tax Dist:	
BUILDING MARKET VALUE		659,021
TOTAL MARKET OB/XF VALUE		93,856
TOTAL LAND VALUE - MARKET		555,000
TOTAL MARKET VALUE		1,307,877
SOH/AGL Deduction		0
ASSESSED VALUE		1,307,877
TOTAL EXEMPTION VALUE	HX HB	50,722
BASE TAXABLE VALUE		1,257,155
TOTAL JUST VALUE		1,307,877
NCON VALUE		172,963
INCOME VALUE		
PREVIOUS YEAR MKT VALUE		1,012,028

PERMIT NUM	DESCRIPTION	AMT	ISSUED
2023-0615	POOL		

SALES DATA

OFF RECORD Number	DATE	TYPE INST	Q / U	V / I	RSN CD	SALE PRICE
2628/0273	3/30/2023	WD	Q	I	01	1,251,000
GRANTOR: PHILLIPS FAMILY TRUST						
GRANTEE: LAUB JOHN A & LISA						
2460/1321	5/11/2021	WD	Q	I	01	850,000
GRANTOR: STEWART MONTIETH H						
GRANTEE: PHILLIPS FAMILY TRU						

BUILDING NOTES

BUILDING DIMENSIONS

FGR=[YR=2025;ORIG=-20,0] W24 S11 W2 S8 E2 S6 E24 N25 $
BAS=[YR=2025;ORIG=-10,0] E6 E10 E8 S25 W24 N25 $
STR=[YR=2025;ORIG=-4,-9] E10 S9 W10 N9 $
.

EXTRA FEATURES

LN	OB/XF CODE	DESCRIPTION	BLD	CAP	L	W	UNITS	UT	Adj R	ADJ UNIT PRICE	ORIG COND	YEAR ON	YEAR ACTUAL	Q	% COND	OB/XF MKT VALUE	NOTES
11	1075	TRELLIS G	0	100	0	0	144.00	SF	35.00	35.00	100	2025	2024		100	5,040	

LAND DESCRIPTION

TOTAL OB/XF 5,040

LN	USE CODE	CLS	LAND USE DESCRIPTION	CAP	RD	LOC ZONE	FRONT	DEPTH	TOT LND UTS	UNIT TYPE	DT	DPTH FACT	% COND	TOT ADJ	UNIT PRICE	ADJ UNIT PRICE	LAND VALUE	OTHER ADJUSTMENTS AND NOTES	YEAR	DENSITY	DECL	FRZ	YR	CONSRV

REVIEW DATE 11/26/2024 BY DJ Total Acres: 0.00 Total Land Value: 555,000 Market: 0 Agricultural: 0 Common: 555,000 PRINTED 07/30/2025 BY SYS