BLOCK 53 LOT 1 & N1/2 OF LOT 2
CITY OF FDNA BEACH

CHURCH PROPERTY NEW ZION BAPTIST CHURCH
PO BOX 15697
FERNANDINA BEACH, FL 32035

2025

00-00-31-1800-0053-0010

NASSAU COUNTY PROPERTY

BUILDING CHARACTERISTICS

ELEMENT	CD	CONSTRUCTION
Exterior Wall	18	CEMENT BRK 100
Roof Structur	04	WOOD TRUSS 100
Roof Cover	03	COMP SHNGL 100
Interior Wall	02	WALL BD/WD 100
Interior Floo	12	HARDWOOD 100
Ceiling	01	FIN.SUSPD 100
Air Condition	03	CENTRAL 100
Heating Type	04	AIR DUCTED 100
Fixtures		4 100
Frame	03	MASONRY 100
Story Height		25 100
RMS		2 100
Stories	1.	1. 100
Units		0 100
BUD8 Adjustme	02	DIST FB 100
Occupancy	00	NONE 100
Quality	04	Quality Level 04
DOR CODE	7100	CHURCHES
MAP NUM		MKT AREA 01
NEIGHBORHOOD/LOC	1002.00	

AREA TYPE	TOTAL GROSS AREA	PCT OF BASE	YEAR	TOT ADJ AREA	SUBAREA MARKET VALUE
BAS	3,798	100	1993	3,798	464,287
FOP	24	30	1993	7	856
FUS	564	100	2010	564	68,946
UST	48	40	1993	19	2,323
TOTALS	4,434			4,388	536,412

MARKET ADJUSTMENTS

TYPE	MDL	EFF. AREA	TOT ADJ PTS	EFF. BASE RATE	REPL. COST NEW	AYB	EYB	ECON	FNCT		NORM	% COND
7101	04	4,388	114.8862	215.41	945,219	1907	1960	0	0	0	43.25	56.75

1 CHURCH – 0% - 0 Heated Area: 4362 HX Base Yr

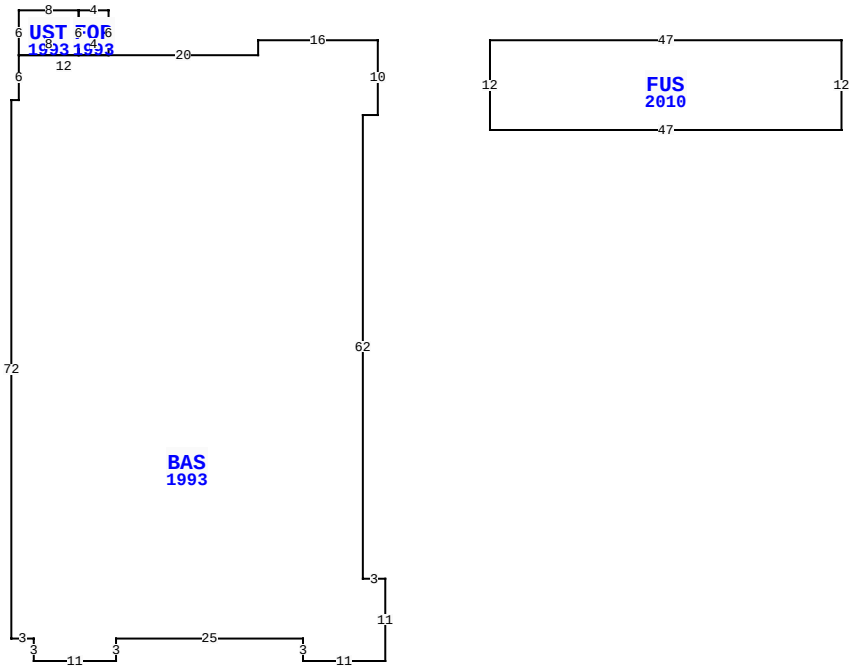

10 S 10TH ST, FERNANDINA BEACH

BLD DATE	12/28/2021 KK	LGL DATE	
XF DATE		LAND DATE	04/15/2025 DC
INC DATE		AG DATE	

VALUATION SUMMARY

VALUATION BY		STANDARD
Tax Group: 2	Tax Dist:	
BUILDING MARKET VALUE		918,454
TOTAL MARKET OB/XF VALUE		1,538
TOTAL LAND VALUE - MARKET		450,000
TOTAL MARKET VALUE		1,369,992
SOH/AGL Deduction		495,181
ASSESSED VALUE		874,811
TOTAL EXEMPTION VALUE	02	874,811
BASE TAXABLE VALUE		0
TOTAL JUST VALUE		1,369,992
NCON VALUE		0
INCOME VALUE		
PREVIOUS YEAR MKT VALUE		1,136,219

PERMIT NUM	DESCRIPTION	AMT	ISSUED
20052800	REMODEL	107,000	10/07/2005
20051834	ELEC OTHER	3,000	05/31/2005
20051834	REPAIR/RRF	15,000	05/24/2005
7971	REPAIR/RRF	2,500	11/08/1993
5042	REPAIR/RRF	13,990	10/06/1988

SALES DATA

OFF RECORD Number	DATE	TYPE INST	Q / U	V / I	RSN CD	SALE PRICE

BUILDING NOTES

BUILDING DIMENSIONS

BAS=[YR=1993] W16 S2 W20 FOP=[YR=1993] N6 W4 UST=[YR=1993] W8 S6 E8 N6 $ S6 E4 $ W12 S6 W1 S72 E3 S3 E11 N3 E25 S3 E11 N11 W3 N62 E2 N10 $ PTR=E15 FUS=[YR=2010] E47 S12 W47 N12$ W15$.

EXTRA FEATURES

LN	OB/XF CODE	DESCRIPTION	BLD	CAP	L	W	UNITS	UT	Adj R	ADJ UNIT PRICE	ORIG COND	YEAR ON	YEAR ACTUAL	Q	% COND	OB/XF MKT VALUE	NOTES
1	0819	CONC 12"	0	0	2	11	22.00	SF	9.50	9.50	100	1907	1907	3	20	42	
2	0424	CL FNC 6'	0	0	0	0	116.00	LF	20.00	20.00	100	1981	1981	3	20	464	
3	0940	SHEDS/PORT	0	0	8	10	80.00	SF	30.00	30.00	100	1993	1993	3	20	480	
4	0810	CONCRETE A	0	0	5	11	55.00	SF	6.50	6.50	100	1935	1935	3	20	72	
5	0810	CONCRETE A	0	0	20	10	200.00	SF	6.50	6.50	100	1980	1980	3	30	390	
6	0810	CONCRETE A	0	0	17	3	51.00	SF	6.50	6.50	100	1977	1977	3	27	90	

LAND DESCRIPTION

TOTAL OB/XF 1,538

LN	USE CODE	CLS	LAND USE DESCRIPTION	CAP	RD	LOC ZONE	FRONT	DEPTH	TOT LND UTS	UNIT TYPE	DT	DPTH FACT	% COND	TOT ADJ	UNIT PRICE	ADJ UNIT PRICE	LAND VALUE	OTHER ADJUSTMENTS AND NOTES	YEAR	DENSITY	DECL	FRZ	YR	CONSRV
1	007100	C	CHURCH	0	0003	C-3	100.00	150.00	15,000.00	SF		1.00	1.00	1.00	30.00	30.00	450,000							

REVIEW DATE 12/28/2021 BY KK Total Acres: 0.34 Total Land Value: 450,000 Market: 0 Agricultural: 0 Common: 450,000 PRINTED 07/30/2025 BY SYS

BLOCK 53 LOT 1 & N1/2 OF LOT 2
CITY OF FDNA BEACH

CHURCH PROPERTY NEW ZION BAPTIST CHURCH
PO BOX 15697
FERNANDINA BEACH, FL 32035

2025

00-00-31-1800-0053-0010

BUILDING CHARACTERISTICS

ELEMENT	CD	CONSTRUCTION
Exterior Wall	05	AVERAGE 100
Roof Structur	03	GABLE/HIP 100
Roof Cover	03	COMP SHNGL 100
Interior Wall	02	WALL BD/WD 100
Interior Floo	14	CARPET 80
Interior Floo	08	SHT VINYL 20
Air Condition	03	CENTRAL 100
Heating Type	04	AIR DUCTED 100
Bedrooms		4 100
Bathrooms		2 100
Frame	02	WOOD FRAME 100
Stories	2.	2. 100
Units		1 100
BUD8 Adjustme	02	DIST FB 100
Occupancy	00	NONE 100
Quality	03	Quality Level 03
DOR CODE	7100	CHURCHES
MAP NUM		MKT AREA 01
NEIGHBORHOOD/LOC	1002.00	

AREA TYPE	TOTAL GROSS AREA	PCT OF BASE	YEAR	TOT ADJ AREA	SUBAREA MARKET VALUE
BAS	1,160	100	1993	1,160	123,003
FUS	872	100	1993	872	92,464
UOP	72	20	1993	14	1,484
UOP	90	20	1993	18	1,909
TOTALS	2,194			2,064	218,859

MARKET ADJUSTMENTS

TYPE	MDL	EFF. AREA	TOT ADJ PTS	EFF. BASE RATE	REPL. COST NEW	AYB	EYB	ECON	FNCT		NORM	% COND
0900	01	2,064	90.1600	142.81	294,760	1935	1950	0	0	0	25.75	74.25

2 SNGL FAM – 0% - 0 Heated Area: 2032 HX Base Yr

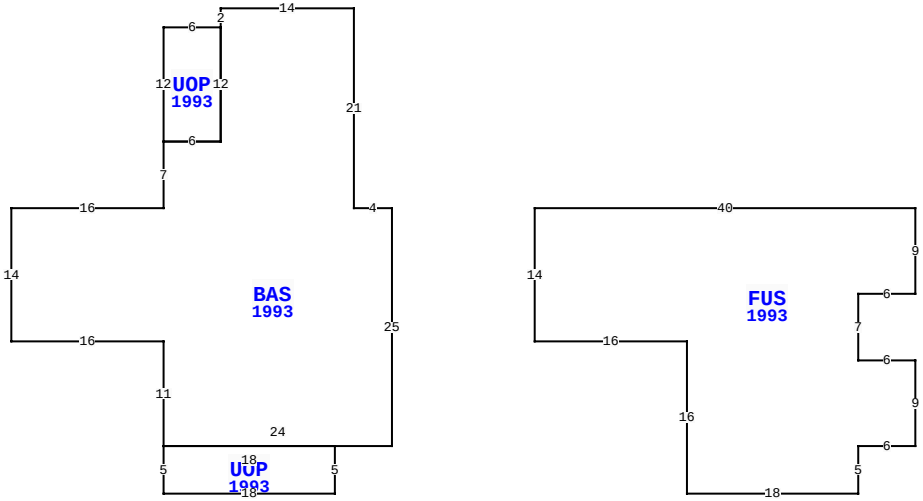

BLD DATE	12/28/2021 KK	LGL DATE	
XF DATE		LAND DATE	04/15/2025 DC
INC DATE		AG DATE	

10 S 10TH ST, FERNANDINA BEACH

NASSAU COUNTY PROPERTY

PAGE 2 of 3 2

VALUATION SUMMARY

VALUATION BY		STANDARD
Tax Group: 2	Tax Dist:	
BUILDING MARKET VALUE		918,454
TOTAL MARKET OB/XF VALUE		1,538
TOTAL LAND VALUE - MARKET		450,000
TOTAL MARKET VALUE		1,369,992
SOH/AGL Deduction		495,181
ASSESSED VALUE		874,811
TOTAL EXEMPTION VALUE	02	874,811
BASE TAXABLE VALUE		0
TOTAL JUST VALUE		1,369,992
NCON VALUE		0
INCOME VALUE		
PREVIOUS YEAR MKT VALUE		1,136,219

PERMIT NUM	DESCRIPTION	AMT	ISSUED

SALES DATA

OFF RECORD Number	DATE	TYPE INST	Q U	V I	RSN CD	SALE PRICE

BUILDING NOTES

BUILDING DIMENSIONS

BAS=[YR=1993] W4 N21 W14 S2 UOP=[YR=1993] W6 S12 E6 N12 $ S12 W6 S7 W16 S14 E16 S11 UOP=[YR=1993] S5 E18 N5 W18 $ E24 N25 $ PTR= E15 FUS=[YR=1993] E40 S9 W6 S7 E6 S9 W6 S5 W18 N16 W16 N14 $ W15 $.

EXTRA FEATURES

L N	OB/XF CODE	DESCRIPTION	BLD	CAP	L	W	UNITS	UT	Adj R	ADJ UNIT PRICE	ORIG COND	YEAR ON	YEAR ACTUAL	Q	% COND	OB/XF MKT VALUE	NOTES

LAND DESCRIPTION

TOTAL OB/XF 0

L N	USE CODE	CLS	LAND USE DESCRIPTION	CAP	R D	LOC ZONE	FRONT	DEPTH	TOT LND UTS	UNIT TYPE	D T	DPTH FACT	% COND	TOT ADJ	UNIT PRICE	ADJ UNIT PRICE	LAND VALUE	OTHER ADJUSTMENTS AND NOTES	YEAR	DENSITY	DECL	FRZ	YR	CONSRV

REVIEW DATE 12/28/2021 BY KK Total Acres: 0.34 Total Land Value: 450,000 Market: 0 Agricultural: 0 Common: 450,000 PRINTED 07/30/2025 BY SYS

BLOCK 53 LOT 1 & N1/2 OF LOT 2
CITY OF FDNA BEACH

CHURCH PROPERTY NEW ZION BAPTIST CHURCH
PO BOX 15697
FERNANDINA BEACH, FL 32035

2025

00-00-31-1800-0053-0010

NASSAU COUNTY PROPERTY

BUILDING CHARACTERISTICS

ELEMENT	CD	CONSTRUCTION
Exterior Wall	15	CONC BLOCK 100
Roof Structur	04	WOOD TRUSS 100
Roof Cover	03	COMP SHNGL 100
Interior Wall	04	PLYWOOD 100
Interior Floo	06	VINYL ASB 100
Ceiling	01	FIN.SUSPD 100
Air Condition	03	CENTRAL 100
Heating Type	04	AIR DUCTED 100
Fixtures		6 100
Frame	03	MASONRY 100
Story Height		10 100
RMS		1 100
Stories	1.	1. 100
Units		0 100
BUD8 Adjustme	02	DIST FB 100
Occupancy	00	NONE 100
Quality	03	Quality Level 03
DOR CODE	7100	CHURCHES
MAP NUM		MKT AREA 01
NEIGHBORHOOD/LOC	1002.00	

AREA TYPE	TOTAL GROSS AREA	PCT OF BASE	YEAR	TOT ADJ AREA	SUBAREA MARKET VALUE
BAS	1,750	100	1993	1,750	160,704
FOP	90	30	1993	27	2,479
TOTALS	1,840			1,777	163,183

MARKET ADJUSTMENTS

TYPE	MDL	EFF. AREA	TOT ADJ PTS	EFF. BASE RATE	REPL. COST NEW	AYB	EYB	ECON	FNCT		NORM	% COND
0303	04	1,777	91.7700	120.04	213,311	1977	1977	0	0	0	23.50	76.50

3 CLUB HOUSE – 0% - 0 Heated Area: 1750 HX Base Yr

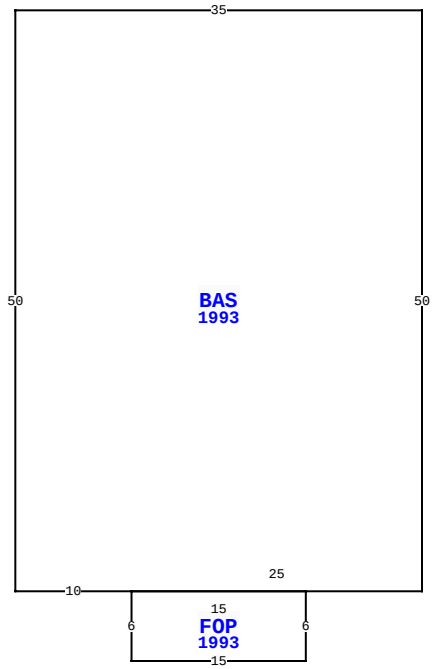

BLD DATE	12/28/2021 KK	LGL DATE	
XF DATE		LAND DATE	04/15/2025 DC
INC DATE		AG DATE	

10 S 10TH ST, FERNANDINA BEACH

VALUATION SUMMARY

VALUATION BY		STANDARD
Tax Group: 2	Tax Dist:	
BUILDING MARKET VALUE		918,454
TOTAL MARKET OB/XF VALUE		1,538
TOTAL LAND VALUE - MARKET		450,000
TOTAL MARKET VALUE		1,369,992
SOH/AGL Deduction		495,181
ASSESSED VALUE		874,811
TOTAL EXEMPTION VALUE	02	874,811
BASE TAXABLE VALUE		0
TOTAL JUST VALUE		1,369,992
NCON VALUE		0
INCOME VALUE		
PREVIOUS YEAR MKT VALUE		1,136,219

PERMIT NUM	DESCRIPTION	AMT	ISSUED

SALES DATA

OFF RECORD Number	DATE	TYPE INST	Q / U	V / I	RSN CD	SALE PRICE

BUILDING NOTES

BUILDING DIMENSIONS

BAS=[YR=1993] W35 S50 E10 FOP=[YR=1993] S6 E15 N6W15$ E25 N50$.

EXTRA FEATURES

L N	OB/XF CODE	DESCRIPTION	BLD	CAP	L	W	UNITS	UT	Adj R	ADJ UNIT PRICE	ORIG COND	YEAR ON	YEAR ACTUAL	Q	% COND	OB/XF MKT VALUE	NOTES

LAND DESCRIPTION

TOTAL OB/XF 0

L N	USE CODE	CLS	LAND USE DESCRIPTION	CAP	R D	LOC ZONE	FRONT	DEPTH	TOT LND UTS	UNIT TYPE	D T	DPTH FACT	% COND	TOT ADJ	UNIT PRICE	ADJ UNIT PRICE	LAND VALUE	OTHER ADJUSTMENTS AND NOTES	YEAR	DENSITY	DECL	FRZ	YR	CONSRV

REVIEW DATE 12/28/2021 BY KK Total Acres: 0.34 Total Land Value: 450,000 Market: 0 Agricultural: 0 Common: 450,000 PRINTED 07/30/2025 BY SYS