BLOCK 39 S45' OF W95' OF LOT 1
& S3' OF W42' OF N55' OF LOT 1
IN OR 1873/1032

GULLEDGE MARK H & JUDITH
206 S 6TH ST
FERNANDINA BEACH, FL 32034

2025

00-00-31-1800-0039-0012

BUILDING CHARACTERISTICS

ELEMENT	CD	CONSTRUCTION
Exterior Wall	10	ABOVE AVG 50
Exterior Wall	10	ABOVE AVG 50
Roof Structur	03	GABLE/HIP 100
Roof Cover	12	MODULAR MT 100
Interior Wall	05	DRYWALL 100
Interior Floo	12	HARDWOOD 100
Air Condition	03	CENTRAL 100
Heating Type	04	AIR DUCTED 100
Bedrooms		2 100
Bathrooms		2 100
Frame	02	WOOD FRAME 100
Stories	1.	1. 100
Units		0 100
BUD8 Adjustme	02	DIST FB 100
Occupancy	00	NONE 100
Quality	04	Quality Level 04

DOR CODE 0100 SINGLE FAMILY
MAP NUM | MKT AREA 01
NEIGHBORHOOD/LOC 1005.00

AREA TYPE	TOTAL GROSS AREA	PCT OF BASE	YEAR	TOT ADJ AREA	SUBAREA MARKET VALUE
BAS	1,246	100	1993	1,246	178,815
DCK	212	10	2008	21	3,013
STR	45	10	1993	4	574
UAT	864	10	2008	86	12,342
UGR	875	45	2008	394	56,544
UOP	65	20	1993	13	1,866
UOP	175	20	1993	35	5,023
TOTALS	3,482			1,799	258,178

MARKET ADJUSTMENTS

TYPE	MDL	EFF. AREA	TOT ADJ PTS	EFF. BASE RATE	REPL. COST NEW	AYB	EYB	ECON	FNCT		NORM	% COND
0900	01	1,799	122.8500	162.16	291,726	1900	2000	0	0	0	11.50	88.50

1 SNGL FAM – 100% - 2014 Heated Area: 1246 HX Base Yr 2014

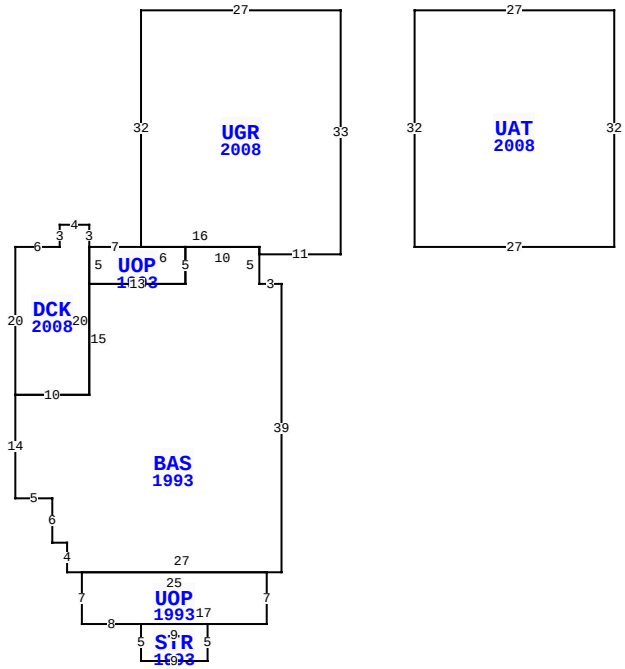

206 S 6TH ST, FERNANDINA BEACH

BLD DATE		LGL DATE	
XF DATE		LAND DATE	05/22/2025 MLU
INC DATE		AG DATE	

EXTRA FEATURES

LN	OB/XF CODE	DESCRIPTION	BLD	CAP	L	W	UNITS	UT	Adj R	ADJ UNIT PRICE	ORIG COND	YEAR ON	YEAR ACTUAL	Q	% COND	OB/XF MKT VALUE	NOTES
1	0810	CONCRETE A	0	100	13	7	91.00	SF	6.50	6.50	100	1960	1960	3	20	118	
2	0810	CONCRETE A	0	100	3	48	144.00	SF	6.50	6.50	100	1960	1960	3	20	187	
3	0810	CONCRETE A	0	100	4	12	48.00	SF	6.50	6.50	100	1960	1960	3	20	62	
4	0810	CONCRETE A	0	100	3	17	51.00	SF	6.50	6.50	100	1993	1993	3	64	212	
5	0810	CONCRETE A	0	100	11	12	132.00	SF	6.50	6.50	100	1993	1993	3	64	549	

NASSAU COUNTY PROPERTY

PAGE 1 of 1 2

VALUATION SUMMARY

VALUATION BY		STANDARD
Tax Group: 2	Tax Dist:	
BUILDING MARKET VALUE		258,178
TOTAL MARKET OB/XF VALUE		1,128
TOTAL LAND VALUE - MARKET		212,112
TOTAL MARKET VALUE		471,418
SOH/AGL Deduction		230,819
ASSESSED VALUE		240,599
TOTAL EXEMPTION VALUE	HX HB	50,722
BASE TAXABLE VALUE		189,877
TOTAL JUST VALUE		471,418
NCON VALUE		0
INCOME VALUE		
PREVIOUS YEAR MKT VALUE		425,638

PERMIT NUM	DESCRIPTION	AMT	ISSUED
20140871	STDSEAM	16,880	05/02/2014
20140763	KITCH	15,000	04/17/2014
20061946	RESIDE & METAL RO	9,000	08/18/2006
20053235	TREE REMOVAL	0	12/22/2005
20033553	DEMOLISH INTER.WA	1,000	07/23/2003
20011980	ELEC.PANEL CHANGE	3,600	09/05/2001

SALES DATA

OFF RECORD Number	DATE	TYPE INST	Q / U	V / I	RSN CD	SALE PRICE
1873/1032	8/16/2013	WD	Q	I	02	297,000
GRANTOR: BOWEN CLAIRE O						
GRANTEE: GULLEDGE MARK H & J						
1873/1030	8/30/2008	WD	U	I	07	100
GRANTOR: YODER LIANE M & JASON						
GRANTEE: BOWEN CLAIRE O						

BUILDING NOTES

BUILDING DIMENSIONS

UGR=[YR=2008] W27 S32 UOP=[YR=1993] W7 DCK=[YR=2008] N3 W4 S3 W6 S20 BAS=[YR=1993] S14 E5 S6 E2 S4 E2 UOP=[YR=1993] S7 E8 STR=[YR=1993] S5E9N5W9 $ E17 N7 W25$ E27 N39 W3 N5 W10 S5 W13 S15 W10$ E10 N20$ S5 E13 N5 W6$ E16 S1 E11 N33$ PTR=E10 UAT=[YR=2008] E27 S32 W27 N32$ W10$.

LAND DESCRIPTION

TOTAL OB/XF 1,128

LN	USE CODE	CLS	LAND USE DESCRIPTION	CAP	RD	LOC ZONE	FRONT	DEPTH	TOT LND UTS	UNIT TYPE	DT	DPTH FACT	% COND	TOT ADJ	UNIT PRICE	ADJ UNIT PRICE	LAND VALUE	OTHER ADJUSTMENTS AND NOTES	YEAR	DENSITY	DECL	FRZ	YR	CONSRV
1	000100	C	RES	100	0003	R-2	45.00	95.00	45.00	FF		1.00	1.00	0.97	4,750.00	4,607.50	207,338							
2	000100	C	RES	100	0003	R-2	3.00	42.00	3.00	FF		1.00	1.00	0.34	4,750.00	1,591.25	4,774							

REVIEW DATE 05/16/2019 BY DJA Total Acres: 0.00 Total Land Value: 212,112 Market: 0 Agricultural: 0 Common: 212,112 PRINTED 07/30/2025 BY SYS