BLOCK 35 LOT 8
(EX W'LY 14.23 FT)
IN OR 2343/1431

BELL MICHAEL M & MELISSA E
101 N 7TH ST
FERNANDINA BEACH, FL 32034

2025

00-00-31-1800-0035-0081

NASSAU COUNTY PROPERTY

BUILDING CHARACTERISTICS

ELEMENT	CD	CONSTRUCTION
Exterior Wall	10	ABOVE AVG 100
Roof Structur	03	GABLE/HIP 100
Roof Cover	13	STAND SEAM 100
Interior Wall	05	DRYWALL 100
Interior Floo	12	HARDWOOD 70
Interior Floo	14	CARPET 30
Air Condition	03	CENTRAL 100
Heating Type	04	AIR DUCTED 100
Bedrooms		3 100
Bathrooms		2.5 100
Frame	02	WOOD FRAME 100
Stories	2.	2. 100
Units		0 100
Occupancy	00	NONE 100
Quality	01	Quality Level 01
DOR CODE	0100	SINGLE FAMILY
MAP NUM		MKT AREA 01
NEIGHBORHOOD/LOC	1005.00	

AREA TYPE	TOTAL GROSS AREA	PCT OF BASE	YEAR	TOT ADJ AREA	SUBAREA MARKET VALUE
BAS	1,656	100	2021	1,656	264,065
FGR	576	55	2021	317	50,548
FOP	180	30	2021	54	8,611
FOP	184	30	2021	55	8,770
FSP	150	40	2021	60	9,567
FUS	837	100	2021	837	133,468
TOTALS	3,583			2,979	475,030

MARKET ADJUSTMENTS

TYPE	MDL	EFF. AREA	TOT ADJ PTS	EFF. BASE RATE	REPL. COST NEW	AYB	EYB	ECON	FNCT		NORM	% COND
0500	01	2,979	101.9430	161.07	479,828	2021	2021	0	0	0	1.00	99.00

1 SFR CUST – 100% - 2022 Heated Area: 2493 HX Base Yr 2022

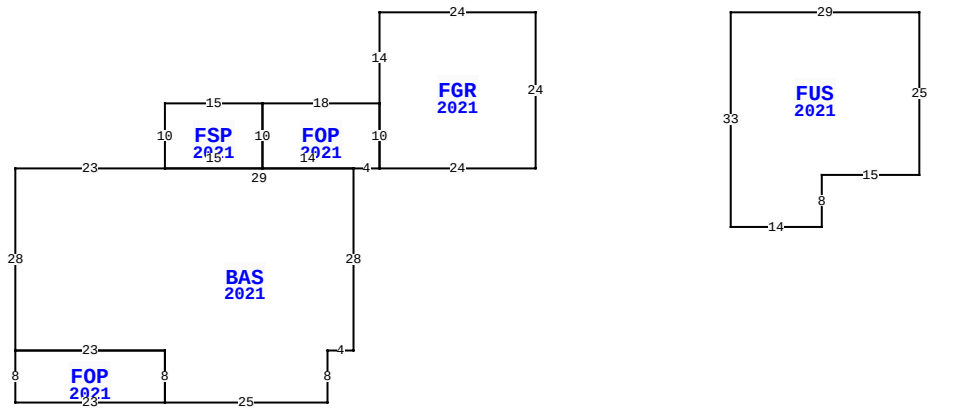

101 N 7TH ST, FERNANDINA BEACH

BLD DATE		LGL DATE	
XF DATE		LAND DATE	05/22/2025 MLU
INC DATE		AG DATE	

NASSAU COUNTY PROPERTY — VALUATION SUMMARY

VALUATION BY		STANDARD
Tax Group: 2	Tax Dist:	
BUILDING MARKET VALUE		475,030
TOTAL MARKET OB/XF VALUE		32,190
TOTAL LAND VALUE - MARKET		407,408
TOTAL MARKET VALUE		914,628
SOH/AGL Deduction		130,279
ASSESSED VALUE		784,349
TOTAL EXEMPTION VALUE	HX HB	50,722
BASE TAXABLE VALUE		733,627
TOTAL JUST VALUE		914,628
NCON VALUE		0
INCOME VALUE		
PREVIOUS YEAR MKT VALUE		828,661

PERMIT NUM	DESCRIPTION	AMT	ISSUED
20210355	CO ISSUED	0	07/15/2021

SALES DATA

OFF RECORD Number	DATE	TYPE INST	Q / U	V / I	RSN CD	SALE PRICE
2343/1431	2/28/2020	WD	Q	V	01	255,000

GRANTOR: KAVANAUGH ELWIN CLINC

GRANTEE: BELL MICHAEL M & ME

BUILDING NOTES

BUILDING DIMENSIONS

FGR=[YR=2021] W24 S14 FOP=[YR=2021] W18 FSP=[YR=2021] W15 S10 BAS=[YR=2021] W23 S28 FOP=[YR=2021] S8 E23 N8 W23 $ E23 S8 E25 N8 E4 N28 W29 $ E15 N10 $ S10 E14 E4 N10$ S10E24 N24 $ PTR= E30 FUS=[YR=2021] E29 S25 W15 S8 W14 N33 $ W30 $.

EXTRA FEATURES

LN	OB/XF CODE	DESCRIPTION	BLD	CAP	L	W	UNITS	UT	Adj R	ADJ UNIT PRICE	ORIG COND	YEAR ON	YEAR ACTUAL	Q	% COND	OB/XF MKT VALUE	NOTES
1	0500	FP-PRE FAB	0	100	0	0	1.00	UT	3,500.00	3,500.00	100	2021	2021	3	99	3,465	
2	0855	CONC PAVER	0	100	0	0	2,447.00	SF	10.00	10.00	100	2021	2021	3	99	24,225	
3	0600	SUMMER KIT	0	100	0	0	1.00	UT	5,000.00	5,000.00	100	2021	2021	3	90	4,500	

LAND DESCRIPTION

TOTAL OB/XF 32,190

LN	USE CODE	CLS	LAND USE DESCRIPTION	CAP	RD	LOC ZONE	FRONT	DEPTH	TOT LND UTS	UNIT TYPE	DT	DPTH FACT	% COND	TOT ADJ	UNIT PRICE	ADJ UNIT PRICE	LAND VALUE	OTHER ADJUSTMENTS AND NOTES	YEAR	DENSITY	DECL	FRZ	YR	CONSRV
1	000100	C	RES	100		R-2	85.00	100.00	85.77	FF		1.00	1.00	1.00	4,750.00	4,750.00	407,408							

REVIEW DATE 11/16/2021 BY RK Total Acres: 0.00 Total Land Value: 407,408 Market: 0 Agricultural: 0 Common: 407,408 PRINTED 07/30/2025 BY SYS