BLOCK 23 LOTS 8 & 9 &
N'LY 9.83 FT LOT 10
IN OR 2009/661 & OR 2009/664

LATIERRA PROME TIDA INC
416 ALACHUA ST
FERNANDINA BEACH, FL 32034

2025

00-00-31-1800-0023-0080

NASSAU COUNTY PROPERTY

BUILDING CHARACTERISTICS

ELEMENT	CD	CONSTRUCTION
Exterior Wall	19	COMMON BRK 100
Roof Structur	04	WOOD TRUSS 100
Roof Cover	03	COMP SHNGL 100
Interior Wall	03	PLASTER 60
Interior Wall	06	CUST PANEL 40
Interior Floo	14	CARPET 100
Ceiling	02	F.NOT SUS 100
Air Condition	05	CHILL WTR 100
Heating Type	08	RAD WATER 100
Fixtures		13 100
Frame	04	REIN CONC 100
Story Height		22 100
RMS		2 100
Stories	1.	1. 100
Units		0 100
BUD8 Adjustme	02	DIST FB 100
Occupancy	00	NONE 100
Quality	04	Quality Level 04

DOR CODE 7100 CHURCHES
MAP NUM | MKT AREA 01
NEIGHBORHOOD/LOC 1005.00

AREA TYPE	TOTAL GROSS AREA	PCT OF BASE	YEAR	TOT ADJ AREA	SUBAREA MARKET VALUE
BAS	3,410	100	1993	3,410	635,142
FUS	1,623	100	1993	1,623	302,298
TOTALS	5,033			5,033	937,441

MARKET ADJUSTMENTS

TYPE	MDL	EFF. AREA	TOT ADJ PTS	EFF. BASE RATE	REPL. COST NEW	AYB	EYB	ECON	FNCT		NORM	% COND
7101	04	5,033	175.3013	273.91	1,378,589	1925	1980	0	0	0	32.00	68.00

1 CHURCH – 0% - 0 Heated Area: 5033 HX Base Yr

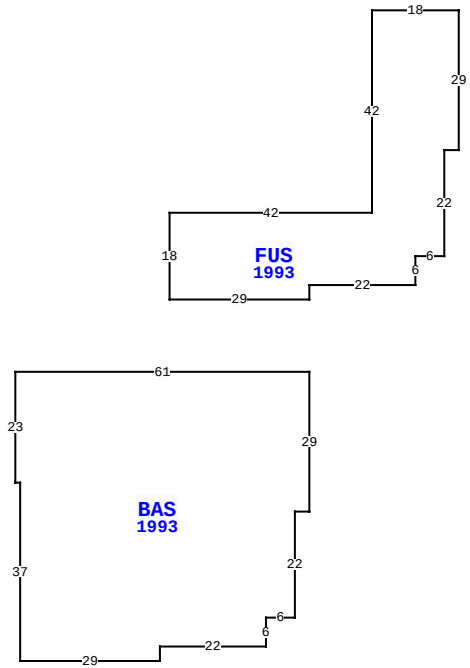

416 ALACHUA ST, FERNANDINA BEACH

BLD DATE	01/07/2020	KK	LGL DATE	
XF DATE	01/07/2020	KK	LAND DATE	03/27/2025 DC
INC DATE			AG DATE	

VALUATION SUMMARY

VALUATION BY		STANDARD
Tax Group: 2	Tax Dist:	
BUILDING MARKET VALUE		1,941,969
TOTAL MARKET OB/XF VALUE		3,160
TOTAL LAND VALUE - MARKET		384,405
TOTAL MARKET VALUE		2,329,534
SOH/AGL Deduction		302,103
ASSESSED VALUE		2,027,431
TOTAL EXEMPTION VALUE	02	2,027,431
BASE TAXABLE VALUE		0
TOTAL JUST VALUE		2,329,534
NCON VALUE		0
INCOME VALUE		
PREVIOUS YEAR MKT VALUE		2,347,057

PERMIT NUM	DESCRIPTION	AMT	ISSUED
20190010	REPAIR/RRF	10,000	11/04/2019
20181692	REPAIR/RRF	10,000	05/18/2018
20111289	ELEC OTHER	2,200	08/03/2011
20062628	H/AC	2,500	11/29/2006
20021509	REMODEL	2,000	09/05/2002
20021508	H/AC	35,000	09/04/2002

SALES DATA

OFF RECORD Number	DATE	TYPE INST	Q / U	V / I	RSN CD	SALE PRICE
2009/0664	10/07/2015	WD	U	I	17	860,000
GRANTOR: FIRST BAPTIST CHURCH						
GRANTEE: LATIERRA PROME TIDA						
2009/0661	10/07/2015	WD	U	I	11	100
GRANTOR: TRUSTEES OF FIRST BAP						
GRANTEE: LATIERRA PROME TIDA						

BUILDING NOTES

BUILDING DIMENSIONS

BAS=[YR=1993] W61 S23 E1 S37 E29 N3 E22 N6 E6 N22 E3 N29 $
PTR= N15 FUS=[YR=1993] N3 E22 N6 E6 N22 E3 N29 W18 S42 W42
S18 E29 $ S15 $.

EXTRA FEATURES

LN	OB/XF CODE	DESCRIPTION	BLD	CAP	L	W	UNITS	UT	Adj R	ADJ UNIT PRICE	ORIG COND	YEAR ON	YEAR ACTUAL	Q	% COND	OB/XF MKT VALUE	NOTES
1	0825	BRICK	0	0	7	27	189.00	SF	12.50	12.50	100	1925	1925	3	20	473	
2	0830	FLAGSTONE	0	0	16	8	128.00	SF	12.00	12.00	100	1925	1925	3	20	307	
3	0810	CONCRETE A	0	0	7	39	273.00	SF	6.50	6.50	100	1953	1953	3	20	355	
4	0810	CONCRETE A	0	0	0	0	314.00	SF	6.50	6.50	100	1988	1988	3	52	1,061	
5	0444	BOX FNC 4'	0	0	0	0	61.00	LF	6.50	6.50	100	1993	1993	3	20	79	
6	0445	BOX FNC 5'	0	0	0	0	128.00	LF	8.10	8.10	100	1998	1998	3	20	207	
7	0463	FENCE GATE	0	0	0	0	5.00	UT	300.00	300.00	100	1998	1998	3	42	630	
8	0443	STK FNC 6'	0	0	0	0	6.00	LF	10.00	10.00	100	2000	2000	3	20	12	
9	0442	STK FNC 5'	0	0	0	0	20.00	LF	8.10	8.10	100	2005	2005	3	22	36	

LAND DESCRIPTION

TOTAL OB/XF 3,160

LN	USE CODE	CLS	LAND USE DESCRIPTION	CAP	RD	LOC ZONE	FRONT	DEPTH	TOT LND UTS	UNIT TYPE	DT	DPTH FACT	% COND	TOT ADJ	UNIT PRICE	ADJ UNIT PRICE	LAND VALUE	OTHER ADJUSTMENTS AND NOTES	YEAR	DENSITY	DECL	FRZ	YR	CONSRV
1	007100	C	CHURCH	0		R-2	100.00	100.00	10,983.00	SF		1.00	1.00	1.00	35.00	35.00	384,405							

REVIEW DATE 01/07/2020 BY KK Total Acres: 0.00 Total Land Value: 384,405 Market: 0 Agricultural: 0 Common: 384,405 PRINTED 07/30/2025 BY SYS

BLOCK 23 LOTS 8 & 9 &
N'LY 9.83 FT LOT 10
IN OR 2009/661 & OR 2009/664

LATIERRA PROME TIDA INC
416 ALACHUA ST
FERNANDINA BEACH, FL 32034

2025

00-00-31-1800-0023-0080

BUILDING CHARACTERISTICS

ELEMENT	CD	CONSTRUCTION
Exterior Wall	19	COMMON BRK 100
Roof Structur	09	RIDGE FRME 100
Roof Cover	04	BUILT-UP 100
Interior Wall	04	PLYWOOD 50
Interior Wall	05	DRYWALL 50
Interior Floo	05	ASPH TILE 50
Interior Floo	14	CARPET 50
Ceiling	01	FIN.SUSPD 100
Air Condition	05	CHILL WTR 100
Heating Type	08	RAD WATER 100
Fixtures		24 100
Frame	04	REIN CONC 100
Common Wall		15 100
Story Height		10 100
RMS		30 100
Stories	2.	2. 100
Units		0 100
BUD8 Adjustme	02	DIST FB 100
Quality	04	Quality Level 04
Occupancy	00	100

DOR CODE	7100	CHURCHES	
MAP NUM		MKT AREA	01
NEIGHBORHOOD/LOC	1005.00		

AREA TYPE	TOTAL GROSS AREA	PCT OF BASE	YEAR	TOT ADJ AREA	SUBAREA MARKET VALUE
BAS	3,847	100	1993	3,847	471,500
FBM	688	70	1993	482	59,076
FUS	3,847	100	1993	3,847	471,500
STP	32	10	2012	3	368
UOP	85	20	2012	17	2,084
TOTALS	8,499			8,196	1,004,528

MARKET ADJUSTMENTS

TYPE	MDL	EFF. AREA	TOT ADJ PTS	EFF. BASE RATE	REPL. COST NEW	AYB	EYB	ECON	FNCT		NORM	% COND
7101	04	8,196	115.3523	180.24	1,477,247	1953	1980	0	0	0	32.00	68.00

2 CHURCH – 0% - 0 Heated Area: 8176 HX Base Yr

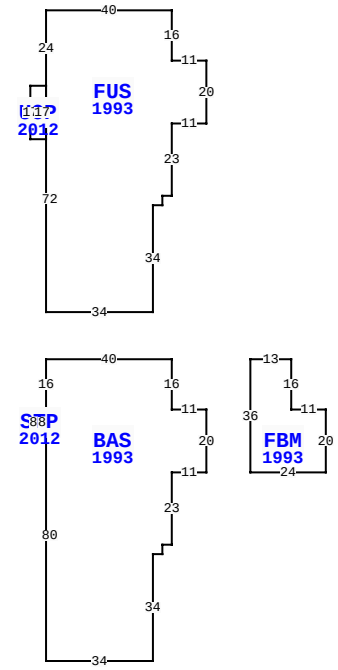

BLD DATE	01/07/2020	KK	LGL DATE
XF DATE	01/07/2020	KK	LAND DATE 03/27/2025 DC
INC DATE			AG DATE

416 ALACHUA ST, FERNANDINA BEACH

NASSAU COUNTY PROPERTY

PAGE 2 of 2 2

VALUATION SUMMARY

VALUATION BY		STANDARD
Tax Group: 2	Tax Dist:	
BUILDING MARKET VALUE		1,941,969
TOTAL MARKET OB/XF VALUE		3,160
TOTAL LAND VALUE - MARKET		384,405
TOTAL MARKET VALUE		2,329,534
SOH/AGL Deduction		302,103
ASSESSED VALUE		2,027,431
TOTAL EXEMPTION VALUE	02	2,027,431
BASE TAXABLE VALUE		0
TOTAL JUST VALUE		2,329,534
NCON VALUE		0
INCOME VALUE		
PREVIOUS YEAR MKT VALUE		2,347,057

PERMIT NUM	DESCRIPTION	AMT	ISSUED
985072	REPAIR/RRF	16,300	03/03/1999
983274	XFOB	400	03/03/1998

SALES DATA

OFF RECORD Number	DATE	TYPE INST	Q U	V I	RSN CD	SALE PRICE
2009/0664	10/07/2015	WD	U	I	17	860,000
GRANTOR: FIRST BAPTIST CHURCH						
GRANTEE: LATIERRA PROME TIDA						
2009/0661	10/07/2015	WD	U	I	11	100
GRANTOR: TRUSTEES OF FIRST BAP						
GRANTEE: LATIERRA PROME TIDA						

BUILDING NOTES

BUILDING DIMENSIONS

BAS=[YR=1993] W40 S16 STP=[YR=2012] W4 S8 E4 N8$ S80 E34 N34 E3 N3 E3 N23 E11 N20 W11 N16$ PTR=E25 FBM=[YR=1993] E13 S16 E11 S20 W24 N36$ W25$ PTR=N15 W6 FUS=[YR=1993] N34E3 N3 E3 N23 E11 N20 W11 N16 W40 S24 UOP=[YR=2012] W5 S17 E5 N17$ S72 E34$ E6S15$.

EXTRA FEATURES

L N	OB/XF CODE	DESCRIPTION	BLD	CAP	L	W	UNITS	UT	Adj R	ADJ UNIT PRICE	ORIG COND	YEAR ON	YEAR ACTUAL	Q	% COND	OB/XF MKT VALUE	NOTES

LAND DESCRIPTION

TOTAL OB/XF 0

L N	USE CODE	CLS	LAND USE DESCRIPTION	CAP	R D	LOC ZONE	FRONT	DEPTH	TOT LND UTS	UNIT TYPE	D T	DPTH FACT	% COND	TOT ADJ	UNIT PRICE	ADJ UNIT PRICE	LAND VALUE	OTHER ADJUSTMENTS AND NOTES	YEAR	DENSITY	DECL	FRZ	YR	CONSRV

REVIEW DATE 01/07/2020 BY KK Total Acres: 0.00 Total Land Value: 384,405 Market: 0 Agricultural: 0 Common: 384,405 PRINTED 07/30/2025 BY SYS