BLOCK 16 W4/5 OF LOT 2 & LOT 3
CITY OF FDNA BEACH

WILLIS CLAUDIA
210 N 3RD ST
FERNANDINA BEACH, FL 32034

2025

00-00-31-1800-0016-0022

BUILDING CHARACTERISTICS

ELEMENT	CD	CONSTRUCTION
Exterior Wall	31	HARDIE BRD 100
Roof Structur	03	GABLE/HIP 100
Roof Cover	03	COMP SHNGL 100
Interior Wall	05	DRYWALL 100
Interior Floo	12	HARDWOOD 100
Air Condition	03	CENTRAL 100
Heating Type	04	AIR DUCTED 100
Bedrooms		2 100
Bathrooms		3 100
Frame	02	WOOD FRAME 100
Stories	2.	2. 100
Units		0 100
BUD8 Adjustme	02	DIST FB 100
Occupancy	00	NONE 100
Quality	06	Quality Level 06

DOR CODE	0100	SINGLE FAMILY	
MAP NUM		MKT AREA	01
NEIGHBORHOOD/LOC	1005.00		

AREA TYPE	TOTAL GROSS AREA	PCT OF BASE	YEAR	TOT ADJ AREA	SUBAREA MARKET VALUE
BAS	824	100	1993	824	159,142
BAS	160	100	2012	160	30,902
BAS	263	100	2012	263	50,794
FOP	138	30	1993	41	7,919
FOP	138	30	1993	41	7,919
FOP	20	30	2012	6	1,158
FSP	120	40	2012	48	9,271
FUS	824	100	1993	824	159,142
STR	16	10	2012	2	386
STR	20	10	2012	2	386
TOTALS	2,559			2,215	427,791

MARKET ADJUSTMENTS

TYPE	MDL	EFF. AREA	TOT ADJ PTS	EFF. BASE RATE	REPL. COST NEW	AYB	EYB	ECON	FNCT		NORM	% COND
0500	01	2,215	130.7320	206.56	457,530	1900	2010	0	0	0	6.50	93.50

1 SFR CUST – 100% - 2014 Heated Area: 2071 HX Base Yr 2014

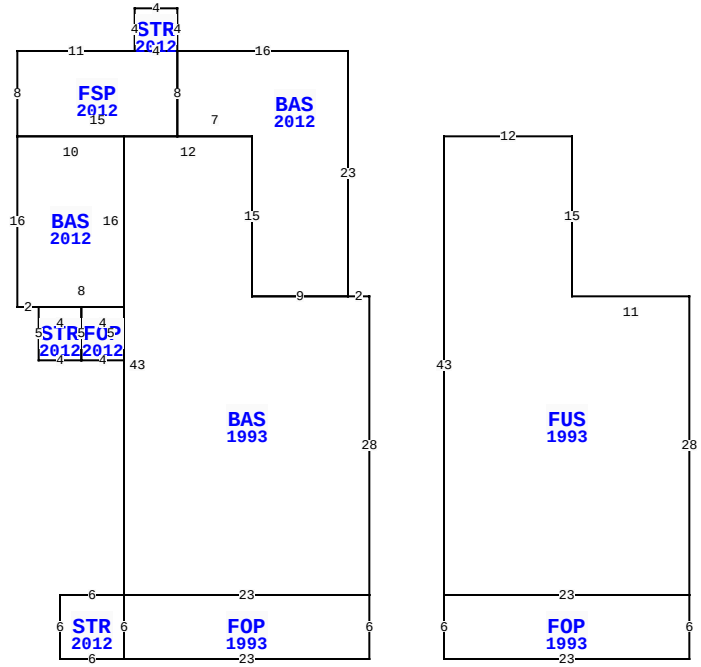

** This building has 11 Sub-Areas

210 N 3RD ST, FERNANDINA BEACH

BLD DATE	08/13/2014	KK	LGL DATE	
XF DATE			LAND DATE	05/22/2025 MLU
INC DATE			AG DATE	

NASSAU COUNTY PROPERTY

PAGE 1 of 2 2

VALUATION SUMMARY

VALUATION BY		STANDARD
Tax Group: 2	Tax Dist:	
BUILDING MARKET VALUE		545,349
TOTAL MARKET OB/XF VALUE		3,102
TOTAL LAND VALUE - MARKET		237,500
TOTAL MARKET VALUE		785,951
SOH/AGL Deduction		310,259
ASSESSED VALUE		475,692
TOTAL EXEMPTION VALUE	HX HB	50,722
BASE TAXABLE VALUE		424,970
TOTAL JUST VALUE		785,951
NCON VALUE		0
INCOME VALUE		
PREVIOUS YEAR MKT VALUE		670,395

PERMIT NUM	DESCRIPTION	AMT	ISSUED
20140947	DECK10X22	5,000	05/09/2014
20120552	RE-ROOF	2,000	04/03/2012
20120480	GAS	350	03/22/2012
20120315	RE-PIPE	6,500	02/28/2012
20120308	WIRING & FIXT.REM	7,000	02/27/2012
20120246	H/AC	13,000	02/14/2012

SALES DATA

OFF RECORD Number	DATE	TYPE INST	Q U	V I	RSN CD	SALE PRICE
2782/943	4/15/2025	WD	Q	I	01	1,075,000
GRANTOR: ROSS RONALD J						
GRANTEE: WILLIS CLAUDIA						
1555/0248	3/10/2008	WD	Q	I		265,000
GRANTOR: HOWARD KENNETH W						
GRANTEE: ROSS RONALD J & FAI						

BUILDING NOTES

BUILDING DIMENSIONS

BAS=[YR=1993] W2 BAS=[YR=2012] N23W16 STR=[YR=2012] N4W4S4 FSP=[YR=2012] W11S8 BAS=[YR=2012] S16E2 STR=[YR=2012] S5E4 FOP=[YR=2012] E4N5W4S5$ N5W4$ E8N16 W10$ E15N8W4$E4$S8E7S15E9$ W9 N15W12S43 STR=[YR=2012] W6S6E6 FOP=[YR=1993] E23N6W23S6$N6$ E23N28$ PTR=E30 FUS=[YR=1993] S28 FOP=[YR=1993] S6 W23N6E23$ W23N43E12S15E11$ W30 $.

EXTRA FEATURES

LN	OB/XF CODE	DESCRIPTION	BLD	CAP	L	W	UNITS	UT	Adj R	ADJ UNIT PRICE	ORIG COND	YEAR ON	YEAR ACTUAL	Q	% COND	OB/XF MKT VALUE	NOTES
1	0940	SHEDS/PORT	0	100	9	15	135.00	SF	33.00	33.00	100	2010	2010	3	40	1,782	
2	1242	WD DECK A	0	100	22	10	220.00	SF	10.00	10.00	100	2014	2014	3	60	1,320	

LAND DESCRIPTION

TOTAL OB/XF 3,102

LN	USE CODE	CLS	LAND USE DESCRIPTION	CAP	RD	LOC ZONE	FRONT	DEPTH	TOT LND UTS	UNIT TYPE	DT	DPTH FACT	% COND	TOT ADJ	UNIT PRICE	ADJ UNIT PRICE	LAND VALUE	OTHER ADJUSTMENTS AND NOTES	YEAR	DENSITY	DECL	FRZ	YR	CONSRV
1	000100	C	RES	100	0003	R-2	50.00	113.00	50.00	FF		1.00	1.00	1.00	4,750.00	4,750.00	237,500							

REVIEW DATE 12/30/2019 BY DJA Total Acres: 0.00 Total Land Value: 237,500 Market: 0 Agricultural: 0 Common: 237,500 PRINTED 07/30/2025 BY SYS

BLOCK 16 W4/5 OF LOT 2 & LOT 3
CITY OF FDNA BEACH

WILLIS CLAUDIA
210 N 3RD ST
FERNANDINA BEACH, FL 32034

2025

00-00-31-1800-0016-0022

BUILDING CHARACTERISTICS

ELEMENT	CD	CONSTRUCTION
Exterior Wall	10	ABOVE AVG 100
Roof Structur	03	GABLE/HIP 100
Roof Cover	03	COMP SHNGL 100
Interior Wall	05	DRYWALL 100
Interior Floo	12	HARDWOOD 100
Air Condition	03	CENTRAL 100
Heating Type	04	AIR DUCTED 100
Bedrooms		1 100
Bathrooms		1 100
Frame	02	WOOD FRAME 100
Stories	2.	2. 100
Units		0 100
Occupancy	00	NONE 100
Quality	04	Quality Level 04

DOR CODE	0100	SINGLE FAMILY	
MAP NUM		MKT AREA	01
NEIGHBORHOOD/LOC	1005.00		

AREA TYPE	TOTAL GROSS AREA	PCT OF BASE	YEAR	TOT ADJ AREA	SUBAREA MARKET VALUE
APT	416	100	2010	416	70,569
FOP	156	30	2010	47	7,973
HXG	416	55	2010	229	38,846
HXO	12	5	2010	1	169
TOTALS	1,000			693	117,558

MARKET ADJUSTMENTS

TYPE	MDL	EFF. AREA	TOT ADJ PTS	EFF. BASE RATE	REPL. COST NEW	AYB	EYB	ECON	FNCT		NORM	% COND
0900	01	693	137.4450	181.43	125,731	2010	2010	0	0	0	6.50	93.50

2 SNGL FAM – 33.19% - 2014 Heated Area: 416 HX Base Yr 2014

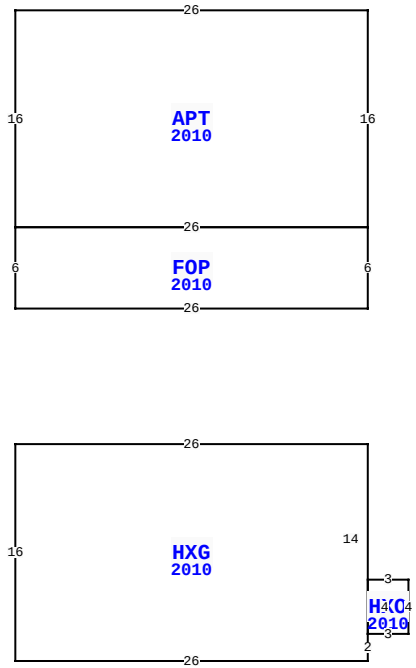

BLD DATE	08/13/2014	KK	LGL DATE		
XF DATE			LAND DATE	05/22/2025	MLU
INC DATE			AG DATE		

210 N 3RD ST, FERNANDINA BEACH

NASSAU COUNTY PROPERTY

PAGE 2 of 2 2

VALUATION SUMMARY

VALUATION BY		STANDARD
Tax Group: 2	Tax Dist:	
BUILDING MARKET VALUE		545,349
TOTAL MARKET OB/XF VALUE		3,102
TOTAL LAND VALUE - MARKET		237,500
TOTAL MARKET VALUE		785,951
SOH/AGL Deduction		310,259
ASSESSED VALUE		475,692
TOTAL EXEMPTION VALUE	HX HB	50,722
BASE TAXABLE VALUE		424,970
TOTAL JUST VALUE		785,951
NCON VALUE		0
INCOME VALUE		
PREVIOUS YEAR MKT VALUE		670,395

PERMIT NUM	DESCRIPTION	AMT	ISSUED
20112101	DUMPSTER IN ROAD	0	11/21/2011
20111669	ADDITION TO MAIN	175,000	09/12/2011
20111318	TEMP POLE FOR REN	250	08/08/2011
20111309	DEMOLISH CHIM/PAN	2,000	08/05/2011
20101432	H/AC	800	08/27/2010
20101434	ELEC.FOR STORAGE	3,000	08/27/2010

SALES DATA

OFF RECORD Number	DATE	TYPE INST	Q U	V I	RSN CD	SALE PRICE
2782/943	4/15/2025	WD	Q	I	01	1,075,000
GRANTOR: ROSS RONALD J						
GRANTEE: WILLIS CLAUDIA						
1555/0248	3/10/2008	WD	Q	I		265,000
GRANTOR: HOWARD KENNETH W						
GRANTEE: ROSS RONALD J & FAI						

BUILDING NOTES

BUILDING DIMENSIONS

HXG=[YR=2010] W26 S16 E26 N2 HXO=[YR=2010] E3 N4 W3 S4$ N14$ PTR= N10 FOP=[YR=2010] N6 APT=[YR=2010] N16W26 S16E26$W26S6E26$ S10$.

EXTRA FEATURES

L N	OB/XF CODE	DESCRIPTION	BLD	CAP	L	W	UNITS	UT	Adj R	ADJ UNIT PRICE	ORIG COND	YEAR ON	YEAR ACTUAL	Q	% COND	OB/XF MKT VALUE	NOTES

LAND DESCRIPTION

TOTAL OB/XF 0

L N	USE CODE	CLS	LAND USE DESCRIPTION	CAP	R D	LOC ZONE	FRONT	DEPTH	TOT LND UTS	UNIT TYPE	D T	DPTH FACT	% COND	TOT ADJ	UNIT PRICE	ADJ UNIT PRICE	LAND VALUE	OTHER ADJUSTMENTS AND NOTES	YEAR	DENSITY	DECL	FRZ	YR	CONSRV

REVIEW DATE 12/30/2019 BY DJA Total Acres: 0.00 Total Land Value: 237,500 Market: 0 Agricultural: 0 Common: 237,500 PRINTED 07/30/2025 BY SYS