BLOCK 16 LOTS 1 & 34
CITY OF FDNA BEACH

MAGUIRE CAITLIN Q/PATEL KESAL
301 BROOME ST
FERNANDINA BEACH, FL 32034

2025

00-00-31-1800-0016-0010

BUILDING CHARACTERISTICS

ELEMENT	CD	CONSTRUCTION
Exterior Wall	10	ABOVE AVG 50
Exterior Wall	11	BD/BTN AVG 50
Roof Structur	03	GABLE/HIP 100
Roof Cover	12	MODULAR MT 100
Interior Wall	05	DRYWALL 90
Interior Wall	03	PLASTER 10
Interior Floo	12	HARDWOOD 70
Interior Floo	14	CARPET 30
Air Condition	03	CENTRAL 100
Heating Type	04	AIR DUCTED 100
Bedrooms		4 100
Bathrooms		2.5 100
Frame	02	WOOD FRAME 100
Stories	2.	2. 100
Units		0 100
BUD8 Adjustme	02	DIST FB 100
Occupancy	00	NONE 100
Quality	03	Quality Level 03
DOR CODE	0100	SINGLE FAMILY
MAP NUM		MKT AREA 01
NEIGHBORHOOD/LOC	1005.00	

AREA TYPE	TOTAL GROSS AREA	PCT OF BASE	YEAR	TOT ADJ AREA	SUBAREA MARKET VALUE
BAS	912	100	1993	912	217,615
BAS	24	100	2000	24	5,726
BAS	153	100	2000	153	36,508
DCK	128	10	2000	13	3,102
FGR	327	55	2000	180	42,950
FOP	184	30	2000	55	13,124
FSP	129	40	2000	52	12,408
FST	112	55	2012	62	14,794
FUS	720	100	1993	720	171,800
FUS	696	100	2000	696	166,074
TOTALS	3,591			2,902	692,452

MARKET ADJUSTMENTS

TYPE	MDL	EFF. AREA	TOT ADJ PTS	EFF. BASE RATE	REPL. COST NEW	AYB	EYB	ECON	FNCT	PD	NORM	% COND
0500	01	2,902	104.1520	164.56	477,553	1900	2010	0	0	145	6.75	145.00

1 SFR CUST – 100% - 2022 Heated Area: 2505 HX Base Yr 2022

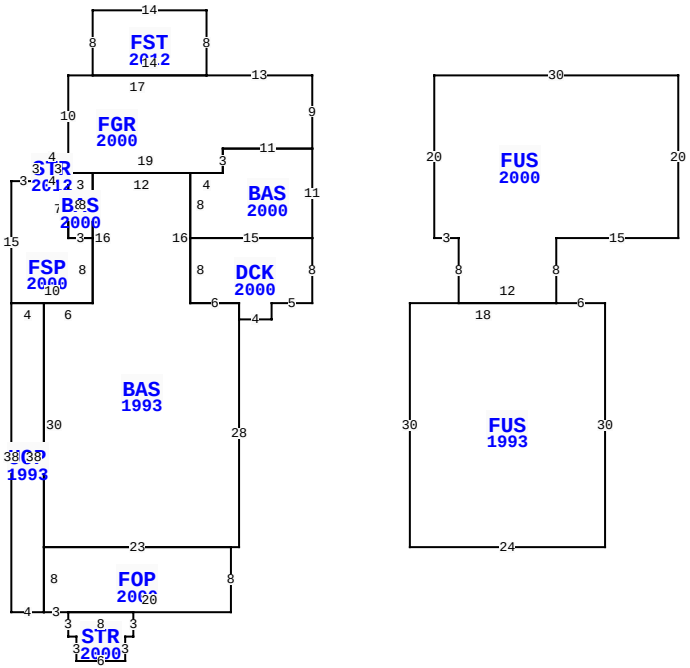

** This building has 13 Sub-Areas

301 BROOME ST, FERNANDINA BEACH

BLD DATE		LGL DATE	
XF DATE		LAND DATE	05/22/2025 MLU
INC DATE		AG DATE	

NASSAU COUNTY PROPERTY

PAGE 1 of 1 2

VALUATION SUMMARY

VALUATION BY		STANDARD
Tax Group: 2	Tax Dist:	
BUILDING MARKET VALUE		692,452
TOTAL MARKET OB/XF VALUE		8,600
TOTAL LAND VALUE - MARKET		237,500
TOTAL MARKET VALUE		938,552
SOH/AGL Deduction		142,556
ASSESSED VALUE		795,996
TOTAL EXEMPTION VALUE	HX HB	50,722
BASE TAXABLE VALUE		745,274
TOTAL JUST VALUE		938,552
NCON VALUE		0
INCOME VALUE		
PREVIOUS YEAR MKT VALUE		866,549

PERMIT NUM	DESCRIPTION	AMT	ISSUED
20111856	84 SF SHED	950	10/07/2011
20111408	RE-ROOF METAL	2,440	08/18/2011
20090927	H/AC	3,500	07/15/2009
20090019	REPLACE 21 WINDOW	14,000	01/08/2009
20070879	148LF METAL FENCE	10,500	05/21/2007
2002565	ADDITION & REMODE	10,000	03/27/2000

SALES DATA

OFF RECORD Number	DATE	TYPE INST	Q / U	V / I	RSN CD	SALE PRICE
2424/1346	1/11/2021	WD	Q	I	01	850,000
GRANTOR: SCHERER ELLEN P						
GRANTEE: MAGUIRE CAITLIN Q &						
2234/0078	10/25/2018	WD	Q	I	02	557,500
GRANTOR: CUTAJAR JOSEPH J						
GRANTEE: SCHERER ELLEN P						

BUILDING NOTES

EXTRA FEATURES

L N	OB/XF CODE	DESCRIPTION	BLD	CAP	L	W	UNITS	UT	Adj R	ADJ UNIT PRICE	ORIG COND	YEAR ON	YEAR ACTUAL	Q	% COND	OB/XF MKT VALUE	NOTES
1	0504	FP-ELECTRI	0	100	0	0	1.00	UT	2,000.00	2,000.00	100	1940	1940	3	20	400	
2	0462	ST/AL FNC	0	100	172	4	688.00	SF	10.00	10.00	100	2007	2007	3	44	3,027	
3	0462	ST/AL FNC	0	100	123	6	738.00	SF	6.60	6.60	100	2007	2007	3	44	2,143	
4	0825	BRICK	0	100	8	5	40.00	SF	12.50	12.50	100	1960	1960	3	36.6	183	
5	0810	CONCRETE A	0	100	30	18	540.00	SF	6.50	6.50	100	2000	2000	3	77	2,703	
6	0810	CONCRETE A	0	100	8	3	24.00	SF	6.50	6.50	100	2012	2012	3	92	144	

BUILDING DIMENSIONS

FGR=[YR=2000] W13 FST=[YR=2012] N8W14S8 E14$ W17 S10
STR=[YR=2012] W4S3 FSP=[YR=2000] W3S15 UOP=[YR=1993] S38 E4
FOP=[YR=2000] E3 STR=[YR=2000] S3E1S3 E6 N3E1N3W8$E20 N8
BAS=[YR=1993] E1 N28 DCK=[YR=2000] E4N2E5N8 BAS=[YR=2000]
N11W11S3W4S8E15$ W15S8E6S2$ N2 W6N16W12 BAS=[YR=2000]
W3S8E3N8$ S16 W6S30E23$ W23 S8 $ N38 W4$ E10 N8W3
N7W4$E4N3$S2E19N3E11N9$ PTR= E15 FUS=[YR=2000] E30S20 W15 S8
FUS=[YR=1993] E6 S30 W24N30 E18 $ W12 N8 W3 N20 $ W15 $.

LAND DESCRIPTION

TOTAL OB/XF 8,600

L N	USE CODE	CLS	LAND USE DESCRIPTION	CAP	R D	LOC ZONE	FRONT	DEPTH	TOT LND UTS	UNIT TYPE	D T	DPTH FACT	% COND	TOT ADJ	UNIT PRICE	ADJ UNIT PRICE	LAND VALUE	OTHER ADJUSTMENTS AND NOTES	YEAR	DENSITY	DECL	FRZ	YR	CONSRV
1	000100	C	RES	100	0003	R-2	50.00	100.00	50.00	FF		1.00	1.00	1.00	4,750.00	4,750.00	237,500							

REVIEW DATE 05/12/2019 BY KBA Total Acres: 0.00 Total Land Value: 237,500 Market: 0 Agricultural: 0 Common: 237,500 PRINTED 07/30/2025 BY SYS