BLOCK 11 LOTS 19 & 20
IN OR 1911/304
CITY OF FDNA BEACH

ANDERSON HEIDI LEIGH
PO BOX 767
FERNANDINA BEACH, FL 32035

2025

00-00-31-1800-0011-0190

NASSAU COUNTY PROPERTY

BUILDING CHARACTERISTICS

ELEMENT	CD	CONSTRUCTION
Exterior Wall	07	ASB SHNGLE 60
Exterior Wall	10	ABOVE AVG 40
Roof Structur	03	GABLE/HIP 100
Roof Cover	03	COMP SHNGL 90
Roof Cover	12	MODULAR MT 10
Interior Wall	05	DRYWALL 100
Interior Floo	12	HARDWOOD 80
Interior Floo	15	HARDTILE 20
Air Condition	03	CENTRAL 100
Heating Type	04	AIR DUCTED 100
Bedrooms		2 100
Bathrooms		2 100
Frame	02	WOOD FRAME 100
Stories	1.	1. 100
Units		0 100
BUD8 Adjustme	02	DIST FB 100
Occupancy	00	NONE 100
Quality	01	Quality Level 01
DOR CODE	0100	SINGLE FAMILY
MAP NUM		MKT AREA 01
NEIGHBORHOOD/LOC	1001.00	

AREA TYPE	TOTAL GROSS AREA	PCT OF BASE	YEAR	TOT ADJ AREA	SUBAREA MARKET VALUE
BAS	800	100	1993	800	85,791
BAS	55	100	2006	55	5,898
BAS	105	100	2006	105	11,260
BAS	754	100	2016	754	80,858
FOP	80	30	2016	24	2,574
FOP	171	30	2016	51	5,469
STR	14	10	1994	1	107
UOP	35	20	2006	7	750
UOP	54	20	2008	11	1,179
UOP	195	20	2016	39	4,183
TOTALS	2,263			1,847	198,071

MARKET ADJUSTMENTS

TYPE	MDL	EFF. AREA	TOT ADJ PTS	EFF. BASE RATE	REPL. COST NEW	AYB	EYB	ECON	FNCT		NORM	% COND
0900	01	1,847	96.0300	126.76	234,126	1948	2000	0	0	0	15.40	84.60

1 SNGL FAM – 100% - 2015 Heated Area: 1714 HX Base Yr 2015

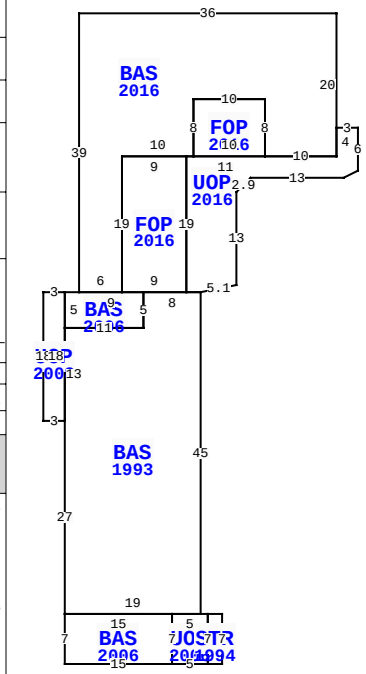

227 S 4TH ST, FERNANDINA BEACH

BLD DATE		LGL DATE	
XF DATE		LAND DATE	05/22/2025 MLU
INC DATE		AG DATE	

EXTRA FEATURES

LN	OB/XF CODE	DESCRIPTION	BLD	CAP	L	W	UNITS	UT	Adj R	ADJ UNIT PRICE	ORIG COND	YEAR ON	YEAR ACTUAL	Q	% COND	OB/XF MKT VALUE	NOTES
1	0820	WOOD WALK	0	100	0	0	123.00	SF	11.75	11.75	100	2011	2011	3	40	578	
2	0858	SCULP CONC	0	100	0	0	480.00	SF	13.00	13.00	100	2011	2011	3	98	6,115	
3	0858	SCULP CONC	0	100	0	0	320.00	SF	13.00	13.00	100	2012	2012	3	98	4,077	
4	0855	CONC PAVER	0	100	0	0	350.00	SF	10.00	10.00	100	2021	2021	3	99	3,465	

VALUATION SUMMARY

VALUATION BY		STANDARD
Tax Group: 2	Tax Dist:	
BUILDING MARKET VALUE		198,071
TOTAL MARKET OB/XF VALUE		14,235
TOTAL LAND VALUE - MARKET		212,500
TOTAL MARKET VALUE		424,806
SOH/AGL Deduction		243,775
ASSESSED VALUE		181,031
TOTAL EXEMPTION VALUE	HX HB	50,722
BASE TAXABLE VALUE		130,309
TOTAL JUST VALUE		424,806
NCON VALUE		0
INCOME VALUE		
PREVIOUS YEAR MKT VALUE		403,246

PERMIT NUM	DESCRIPTION	AMT	ISSUED
20150526	CO ISSUED	0	08/11/2016
20150526	ADDITION	109,000	03/11/2015
20111479	XFOB	1,000	08/29/2011
20062812	H/AC	3,300	12/27/2006
20062711	ELEC OTHER	1,500	12/08/2006
20062557	REPAIR/RRF	2,300	11/16/2006

SALES DATA

OFF RECORD Number	DATE	TYPE INST	Q / U	V / I	RSN CD	SALE PRICE
1911/0304	3/26/2014	WD	Q	I	02	155,000
GRANTOR: ABERCROMBIE HENRY S &						
GRANTEE: ANDERSON HEIDI LEIG						
1551/0692	2/15/2008	WD	Q	I		175,000
GRANTOR: FRITTS-REILLY SARAH A						
GRANTEE: ABERCROMBIE HENRY S						

BUILDING NOTES

BUILDING DIMENSIONS

BAS=[YR=2016] W36 S39 BAS=[YR=2006] W2 UOP=[YR=2008] W3 S18 E3 BAS=[YR=1993] S27 BAS=[YR=2006] S7 E15 UOP=[YR=2006] E5 STR=[YR=1994] E2 N7 W2 S7$ N7 W5 S7$ N7 W15$ E19 N45 UOP=[YR=2016] U1 R5 N13 U2 R2 E13 U1 R2 N6 W3 S4 W10 FOP=[YR=2016] W10 N8 E10 S8$ W11 FOP=[YR=2016] W9 S19 E9 N19$ S19 E2$ W8 S5 W11S13$ N18$ S5 E11 N5 W9$ E6 N19 E10 N8 E10 S8 E10 N20$.

LAND DESCRIPTION

TOTAL OB/XF 14,235

LN	USE CODE	CLS	LAND USE DESCRIPTION	CAP	RD	LOC ZONE	FRONT	DEPTH	TOT LND UTS	UNIT TYPE	DT	DPTH FACT	% COND	TOT ADJ	UNIT PRICE	ADJ UNIT PRICE	LAND VALUE	OTHER ADJUSTMENTS AND NOTES	YEAR	DENSITY	DECL	FRZ	YR	CONSRV
1	000100	C	RES	100	0006	R-2	50.00	100.00	50.00	FF		1.00	1.00	1.00	4,250.00	4,250.00	212,500							

REVIEW DATE 01/14/2021 BY KBA Total Acres: 0.00 Total Land Value: 212,500 Market: 0 Agricultural: 0 Common: 212,500 PRINTED 07/30/2025 BY SYS