EASTERLY 30.97 FT OF LOT 1
IN OR 2559/853
TARPON VIEW SUB PB 5/234

MCGOOGAN BRUCE & JENNIFER
829 N FLETCHER AVE
FERNANDINA BEACH, FL 32034

2025

00-00-31-175A-0001-0020

BUILDING CHARACTERISTICS

ELEMENT	CD	CONSTRUCTION
Exterior Wall	16	WD FR STUC 70
Exterior Wall	12	CEDAR 30
Roof Structur	03	GABLE/HIP 100
Roof Cover	03	COMP SHNGL 100
Interior Wall	05	DRYWALL 100
Interior Floo	14	CARPET 70
Interior Floo	11	CLAY TILE 30
Air Condition	03	CENTRAL 100
Heating Type	04	AIR DUCTED 100
Bedrooms		2 100
Bathrooms		2 100
Frame	02	WOOD FRAME 100
Stories	1.5	1.5 100
Units		0 100
Quality	05	Quality Level 05
DOR CODE	0100	SINGLE FAMILY
MAP NUM		MKT AREA 01
NEIGHBORHOOD/LOC	1024.00	

AREA TYPE	TOTAL GROSS AREA	PCT OF BASE	YEAR	TOT ADJ AREA	SUBAREA MARKET VALUE
BAL	195	15	1993	29	4,286
BAS	754	100	1993	754	111,433
FGR	242	55	1993	133	19,656
FOP	9	30	1993	3	443
FSP	63	40	1993	25	3,695
FSP	308	40	1995	123	18,178
FUS	566	100	1983	566	83,648
TOTALS	2,137			1,633	241,339

MARKET ADJUSTMENTS

TYPE	MDL	EFF. AREA	TOT ADJ PTS	EFF. BASE RATE	REPL. COST NEW	AYB	EYB	ECON	FNCT		NORM	% COND
0320	11	1,633	160.6378	160.64	262,325	1988	2008	0	0	0	8.00	92.00

1 TOWNHOUSE - 0% - 2023 Heated Area: 1320 HX Base Yr

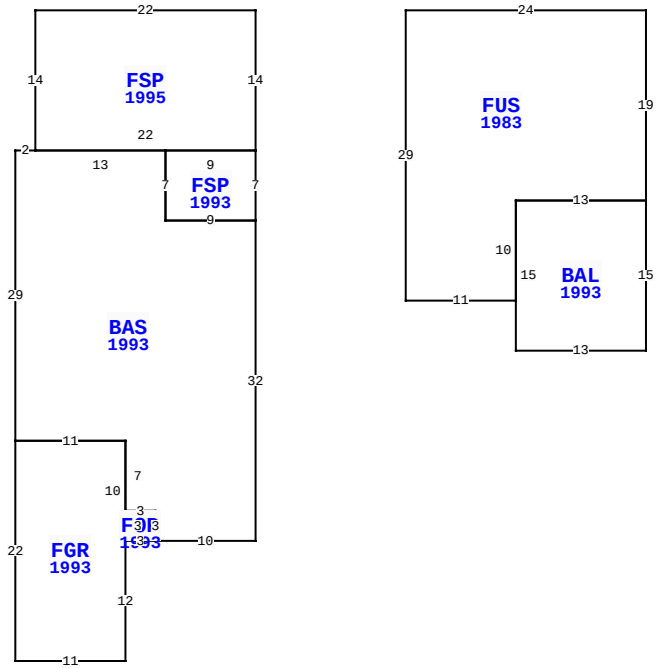

2751 W 5TH ST B, FERNANDINA BEACH

BLD DATE		LGL DATE	
XF DATE		LAND DATE	
INC DATE		AG DATE	

NASSAU COUNTY PROPERTY

PAGE 1 of 1 2

VALUATION SUMMARY

VALUATION BY	STANDARD
Tax Group: 2	Tax Dist:
BUILDING MARKET VALUE	241,339
TOTAL MARKET OB/XF VALUE	11,206
TOTAL LAND VALUE - MARKET	255,000
TOTAL MARKET VALUE	507,545
SOH/AGL Deduction	0
ASSESSED VALUE	507,545
TOTAL EXEMPTION VALUE	0
BASE TAXABLE VALUE	507,545
TOTAL JUST VALUE	507,545
NCON VALUE	0
INCOME VALUE	
PREVIOUS YEAR MKT VALUE	496,966

PERMIT NUM	DESCRIPTION	AMT	ISSUED
20080505	REROOF W/30YR SHN	6,300	03/28/2008
7563	XFOB	1,792	03/04/1993

SALES DATA

OFF RECORD Number	DATE	TYPE INST	Q U	V I	RSN CD	SALE PRICE
2559/0853	4/27/2022	WD	Q	I	01	575,000
GRANTOR: DIXON EDWARD & BETH S						
GRANTEE: MCGOOGAN BRUCE & JE						
2266/0521	4/03/2019	WD	Q	I	02	300,000
GRANTOR: STOUGHTON-DOHERTY KIM						
GRANTEE: DIXON EDWARD & BETH						

BUILDING NOTES

BUILDING DIMENSIONS

FSP=[YR=1995] W22 S14 BAS=[YR=1993] W2 S29 FGR=[YR=1993] S22 E11 N12 FOP=[YR=1993] E3 N3 W3 S3 $ N10 W11 $ E11 S7 E3 S3 E10 N32 FSP=[YR=1993] N7 W9 S7 E9 $ W9 N7 W13 $ E22 N14 $ PTR= E15 FUS=[YR=1983] E24 S19 BAL=[YR=1993] S15 W13N15E13$ W13 S10 W11 N29 $ W15 $.

EXTRA FEATURES

LN	OB/XF CODE	DESCRIPTION	BLD	CAP	L	W	UNITS	UT	Adj R	ADJ UNIT PRICE	ORIG COND	YEAR ON	YEAR ACTUAL	Q	% COND	OB/XF MKT VALUE	NOTES
1	0810	CONCRETE A	0	0	45	11	495.00	SF	6.50	6.50	100	1988	1988	3	52	1,673	
2	0810	CONCRETE A	0	0	19	18	342.00	SF	6.50	6.50	100	1992	1992	3	62	1,378	
3	0835	QUARY TILE	0	0	0	0	182.00	SF	10.00	10.00	100	1992	1992	3	62	1,128	
4	0825	BRICK	0	0	35	20	700.00	SF	10.00	10.00	100	1998	1998	3	92	6,440	
5	0825	BRICK	0	0	17	3	51.00	SF	12.50	12.50	100	1998	1998	3	92	587	

LAND DESCRIPTION

TOTAL OB/XF 11,206

LN	USE CODE	CLS	LAND USE DESCRIPTION	CAP	RD	LOC ZONE	FRONT	DEPTH	TOT LND UTS	UNIT TYPE	DT	DPTH FACT	% COND	TOT ADJ	UNIT PRICE	ADJ UNIT PRICE	LAND VALUE	OTHER ADJUSTMENTS AND NOTES	YEAR	DENSITY	DECL	FRZ	YR	CONSRV
1	000100	C	RES	0	0006	R-2	31.00	100.00	1.00	LT		1.00	1.00	0.85	300,000.00	255,000.00	255,000							

REVIEW DATE 05/12/2019 BY KBA Total Acres: 0.00 Total Land Value: 255,000 Market: 0 Agricultural: 0 Common: 255,000 PRINTED 07/30/2025 BY SYS