LOT 7
SURF UNIT TWO-REPLAT PBK 8/269

PRINCE TERESA
3272 1ST AVE
FERNANDINA BEACH, FL 32034

2025

00-00-31-1742-0007-0000

BUILDING CHARACTERISTICS

ELEMENT	CD	CONSTRUCTION
Exterior Wall	10	ABOVE AVG 100
Roof Structur	03	GABLE/HIP 100
Roof Cover	03	COMP SHNGL 100
Interior Wall	05	DRYWALL 100
Interior Floo	12	HARDWOOD 60
Interior Floo	14	CARPET 40
Air Condition	03	CENTRAL 100
Heating Type	04	AIR DUCTED 100
Bedrooms		4 100
Bathrooms		3.5 100
Frame	02	WOOD FRAME 100
Stories	2.	2. 100
Units		0 100
Occupancy	00	NONE 100
Quality	03	Quality Level 03
DOR CODE	0100	SINGLE FAMILY
MAP NUM		MKT AREA 01
NEIGHBORHOOD/LOC	1044.100	

AREA TYPE	TOTAL GROSS AREA	PCT OF BASE	YEAR	TOT ADJ AREA	SUBAREA MARKET VALUE
BAS	991	100	2019	991	159,526
FGR	601	55	2019	331	53,283
FOP	126	30	2019	38	6,117
FOP	300	30	2019	90	14,487
FOP	300	30	2019	90	14,487
FUS	1,553	100	2019	1,553	249,994
STR	42	10	2019	4	644
STR	63	10	2019	6	966
TOTALS	3,976			3,103	499,505

MARKET ADJUSTMENTS

TYPE	MDL	EFF. AREA	TOT ADJ PTS	EFF. BASE RATE	REPL. COST NEW	AYB	EYB	ECON	FNCT		NORM	% COND
0500	01	3,103	103.9600	164.26	509,699	2019	2019	0	0	0	2.00	98.00

1 SFR CUST – 100% - 2020 Heated Area: 2544 HX Base Yr 2020

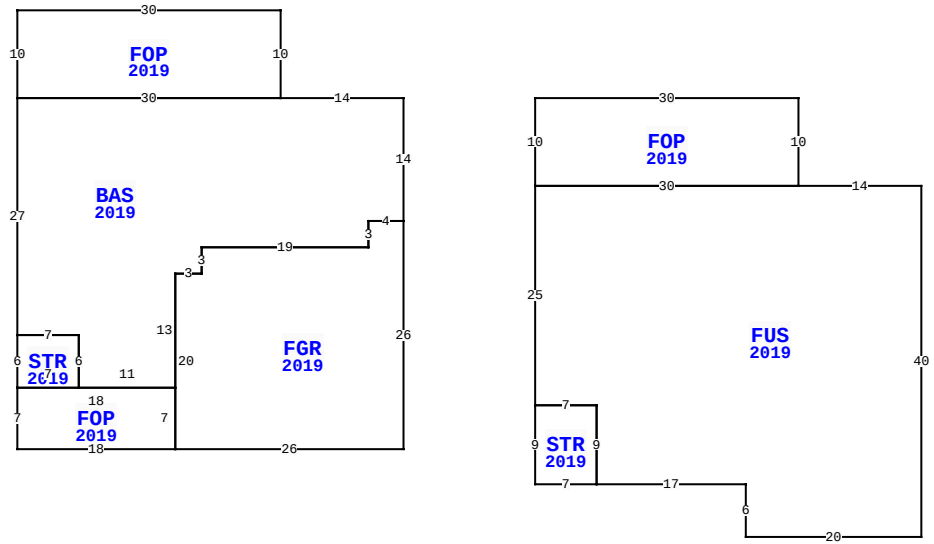

3272 1ST AV, FERNANDINA BEACH

BLD DATE		LGL DATE	
XF DATE		LAND DATE	05/06/2025 MLU
INC DATE		AG DATE	

NASSAU COUNTY PROPERTY

PAGE 1 of 1 2

VALUATION SUMMARY

VALUATION BY		STANDARD
Tax Group: 2	Tax Dist:	
BUILDING MARKET VALUE		499,505
TOTAL MARKET OB/XF VALUE		5,539
TOTAL LAND VALUE - MARKET		350,000
TOTAL MARKET VALUE		855,044
SOH/AGL Deduction		352,418
ASSESSED VALUE		502,626
TOTAL EXEMPTION VALUE	HX HB	50,722
BASE TAXABLE VALUE		451,904
TOTAL JUST VALUE		855,044
NCON VALUE		0
INCOME VALUE		
PREVIOUS YEAR MKT VALUE		782,219

PERMIT NUM	DESCRIPTION	AMT	ISSUED
20181776	NEW CONSTR	0	04/24/2018

SALES DATA

OFF RECORD Number	DATE	TYPE INST	Q U	V I	RSN CD	SALE PRICE
2286/0550	6/28/2019	WD	Q	I	01	652,900

GRANTOR: RIVERSIDE HOMES OF NO

GRANTEE: PRINCE TERESA

BUILDING NOTES

BUILDING DIMENSIONS

BAS=[YR=2019] W14 FOP=[YR=2019] N10 W30 S10 E30$ W30 S27 STR=[YR=2019] S6 FOP=[YR=2019] S7 E18 FGR=[YR=2019] E26 N26 W4 S3 W19 S3 W3 S20$ N7 W18$ E7 N6 W7$ E7 S6 E11 N13 E3 N3 E19 N3 E4 N14$ PTR=E15 FOP=[YR=2019] E30 S10 FUS=[YR=2019] E14 S40 W20 N6 W17 STR=[YR=2019] W7 N9 E7 S9$ N9 W7 N25 E30$ W30 N10$ W15$.

EXTRA FEATURES

L N	OB/XF CODE	DESCRIPTION	BLD	CAP	L	W	UNITS	UT	Adj R	ADJ UNIT PRICE	ORIG COND	YEAR ON	YEAR ACTUAL	Q	% COND	OB/XF MKT VALUE	NOTES
1	0855	CONC PAVER	0	100	0	0	448.00	SF	10.00	10.00	100	2019	2019	3	97	4,346	
2	0855	CONC PAVER	0	100	0	0	123.00	SF	10.00	10.00	100	2019	2019	3	97	1,193	

LAND DESCRIPTION

TOTAL OB/XF 5,539

L N	USE CODE	CLS	LAND USE DESCRIPTION	CAP	R D	LOC ZONE	FRONT	DEPTH	TOT LND UTS	UNIT TYPE	D T	DPTH FACT	% COND	TOT ADJ	UNIT PRICE	ADJ UNIT PRICE	LAND VALUE	OTHER ADJUSTMENTS AND NOTES	YEAR	DENSITY	DECL	FRZ	YR	CONSRV
1	000100	C	RES	100		R-3	0.00	0.00	1.00	LT		1.00	1.00	1.00	350,000.00	350,000.00	350,000							

REVIEW DATE 05/22/2019 BY DJ Total Acres: 0.00 Total Land Value: 350,000 Market: 0 Agricultural: 0 Common: 350,000 PRINTED 07/30/2025 BY SYS