LOT 1-1
SURF UNIT ONE PB 7/300

ROCATO REVOCABLE TRUST/TOLBERT CARLTON E JR CO-TRU
45 W DURHAM STREET
PHILADELPHIA, PA 19119

2025

00-00-31-1741-0001-0010

NASSAU COUNTY PROPERTY

BUILDING CHARACTERISTICS

ELEMENT	CD	CONSTRUCTION
Exterior Wall	16	WD FR STUC 70
Exterior Wall	17	CB STUCCO 30
Roof Structur	04	WOOD TRUSS 100
Roof Cover	12	MODULAR MT 100
Interior Wall	05	DRYWALL 100
Interior Floo	10	TERRAZZO 50
Interior Floo	14	CARPET 50
Air Condition	03	CENTRAL 100
Heating Type	04	AIR DUCTED 100
Bedrooms		3 100
Bathrooms		4 100
Frame	02	WOOD FRAME 100
Stories	2.	2. 100
Units		0 100
Occupancy	00	NONE 100
Quality	04	Quality Level 04
DOR CODE	0100	SINGLE FAMILY
MAP NUM		MKT AREA 01
NEIGHBORHOOD/LOC	1101.00	

AREA TYPE	TOTAL GROSS AREA	PCT OF BASE	YEAR	TOT ADJ AREA	SUBAREA MARKET VALUE
BAS	1,272	100	2010	1,272	123,084
FGR	528	55	2010	290	28,062
FOP	18	30	2010	5	484
FOP	96	30	2010	29	2,806
FOP	110	30	2010	33	3,193
FOP	120	30	2010	36	3,484
FST	30	55	2010	16	1,548
FST	30	55	2010	16	1,548
FUS	1,930	100	2010	1,930	186,755
UOP	120	20	2010	24	2,323
TOTALS	4,254			3,651	353,286

MARKET ADJUSTMENTS

TYPE	MDL	EFF. AREA	TOT ADJ PTS	EFF. BASE RATE	REPL. COST NEW	AYB	EYB	ECON	FNCT		NORM	% COND
0320	01	3,651	104.6115	104.61	381,931	2009	2009	0	0	0	7.50	92.50

1 TOWNHOUSE - 0% - 0 Heated Area: 3202 HX Base Yr

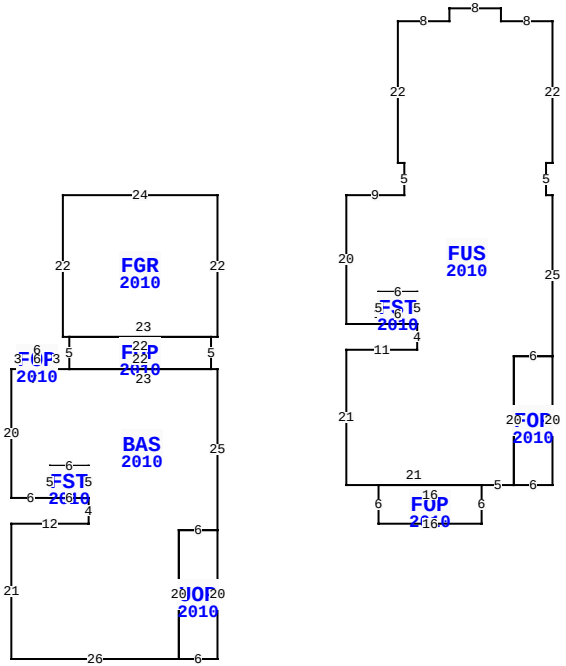

3205 EVENTIDE CT, FERNANDINA BEACH

BLD DATE		LGL DATE	
XF DATE		LAND DATE	05/06/2025 MLU
INC DATE		AG DATE	

VALUATION SUMMARY

VALUATION BY	STANDARD
Tax Group: 2	Tax Dist:
BUILDING MARKET VALUE	353,286
TOTAL MARKET OB/XF VALUE	9,612
TOTAL LAND VALUE - MARKET	275,000
TOTAL MARKET VALUE	637,898
SOH/AGL Deduction	14,971
ASSESSED VALUE	622,927
TOTAL EXEMPTION VALUE	0
BASE TAXABLE VALUE	622,927
TOTAL JUST VALUE	637,898
NCON VALUE	0
INCOME VALUE	
PREVIOUS YEAR MKT VALUE	597,157

PERMIT NUM	DESCRIPTION	AMT	ISSUED
20110257	FIRE SPRNK	1,300	02/23/2011
20110195	REMODEL	1,000	02/10/2011
20110134	NEW CONSTR	650	02/01/2011
E23176	ELEC OTHER	0	01/01/2011
20101981	NEW CONSTR	895	11/16/2010
20101946	NEW CONSTR	2,000	11/10/2010

SALES DATA

OFF RECORD Number	DATE	TYPE INST	Q / U	V / I	RSN CD	SALE PRICE
2717/666	5/16/2024	QC	U	I	11	100
GRANTOR: TOLBERT CARLTON E JR						
GRANTEE: ROCATO REVOCABLE TR						
2651/1034	6/30/2023	WD	U	I	16	141,000
GRANTOR: WILSON-TOLBERT ROBIN						
GRANTEE: TOLBERT CARLTON E J						

BUILDING NOTES

BUILDING DIMENSIONS

FGR=[YR=2010] W24 S22 E1 FOP=[YR=2010] S5 BAS=[YR=2010] W2 FOP=[YR=2010] N3 W6 S3 E6$ W7 S20 E6 FST=[YR=2010] N5 E6 S5 W6$ E6 S4 W12 S21 E26 UOP=[YR=2010] E6 N20 W6 S20$ N20 E6 N25 W23$ E22 N5W22$ E23 N22$ PTR=E20 FUS=[YR=2010] E9 N5 W1 N22 E8 N2 E8 S2 E8 S22 W1 S5 E1 S25 FOP=[YR=2010] S20 W6 N20 E6$ W6 S20 W5 FOP=[YR=2010] S6 W16 N6 E16$ W21 N21 E11 N4 FST=[YR=2010] N5 W6 S5 E6 $ W11 N20$ W20$.

EXTRA FEATURES

LN	OB/XF CODE	DESCRIPTION	BLD	CAP	L	W	UNITS	UT	Adj R	ADJ UNIT PRICE	ORIG COND	YEAR ON	YEAR ACTUAL	Q	% COND	OB/XF MKT VALUE	NOTES
1	0855	CONC PAVER	0	0	0	0	1,080.00	SF	10.00	10.00	100	2009	2009	3	89	9,612	

LAND DESCRIPTION

TOTAL OB/XF 9,612

LN	USE CODE	CLS	LAND USE DESCRIPTION	CAP	RD	LOC ZONE	FRONT	DEPTH	TOT LND UTS	UNIT TYPE	DT	DPTH FACT	% COND	TOT ADJ	UNIT PRICE	ADJ UNIT PRICE	LAND VALUE	OTHER ADJUSTMENTS AND NOTES	YEAR	DENSITY	DECL	FRZ	YR	CONSRV
1	000100	C	RES	0		R-3	0.00	0.00	1.00	LT		1.00	1.00	1.00	275,000.00	275,000.00	275,000							

REVIEW DATE 01/06/2023 BY TWA Total Acres: 0.00 Total Land Value: 275,000 Market: 0 Agricultural: 0 Common: 275,000 PRINTED 07/30/2025 BY SYS