S-4 OF TRACT A
IN OR 2505/962
SOUTH BEACH SUB PB 3/11

LAWHORN BONNIE F &/FREDERICK APRIL LYNN ET AL
3105 FIRST AVE B
FERNANDINA BEACH, FL 32034

**2025**

**00-00-31-1720-000A-0040**

## BUILDING CHARACTERISTICS

| ELEMENT | CD | CONSTRUCTION |
|---|---|---|
| Exterior Wall | 10 | ABOVE AVG 100 |
| Roof Structur | 03 | GABLE/HIP 100 |
| Roof Cover | 03 | COMP SHNGL 100 |
| Interior Wall | 05 | DRYWALL 100 |
| Interior Floo | 14 | CARPET 80 |
| Interior Floo | 13 | LVT/LAMNT 20 |
| Air Condition | 03 | CENTRAL 100 |
| Heating Type | 04 | AIR DUCTED 100 |
| Bedrooms | | 6 100 |
| Bathrooms | | 5 100 |
| Frame | 02 | WOOD FRAME 100 |
| Stories | 2. | 2. 100 |
| Units | | 0 100 |
| Occupancy | 00 | NONE 100 |
| Quality | 03 | Quality Level 03 |
| DOR CODE | 0800 | MULTI-FAMILY |
| MAP NUM | | MKT AREA 01 |
| NEIGHBORHOOD/LOC | 1043.00 | |

| AREA TYPE | TOTAL GROSS AREA | PCT OF BASE | YEAR | TOT ADJ AREA | SUBAREA MARKET VALUE |
|---|---|---|---|---|---|
| BAS | 670 | 100 | 2000 | 670 | 76,728 |
| FGR | 351 | 55 | 2000 | 193 | 22,102 |
| FOP | 15 | 30 | 2000 | 4 | 458 |
| FOP | 25 | 30 | 2000 | 8 | 916 |
| FOP | 144 | 30 | 2000 | 43 | 4,924 |
| FST | 35 | 55 | 2000 | 19 | 2,176 |
| FUS | 1,046 | 100 | 2000 | 1,046 | 119,787 |
| HXB | 670 | 100 | 2000 | 670 | 76,728 |
| HXB | 1,046 | 100 | 2000 | 1,046 | 119,787 |
| HXG | 351 | 55 | 2000 | 193 | 22,102 |
| TOTALS | 5,086 | | | 4,014 | 459,680 |

## MARKET ADJUSTMENTS

| TYPE | MDL | EFF. AREA | TOT ADJ PTS | EFF. BASE RATE | REPL. COST NEW | AYB | EYB | ECON | FNCT | | NORM | % COND |
|---|---|---|---|---|---|---|---|---|---|---|---|---|
| 2700 | 01 | 4,014 | 98.0320 | 129.40 | 519,412 | 2000 | 2000 | 0 | 0 | 0 | 11.50 | 88.50 |

1 DUPLEX – 100% - 2022 Heated Area: 3432 HX Base Yr 2022

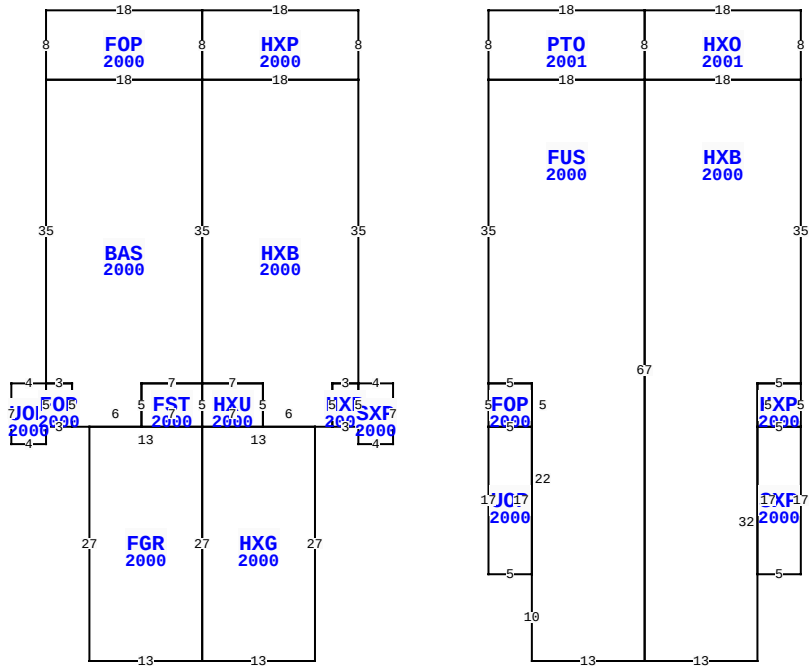


** This building has 20 Sub-Areas

3105 1ST AVE A&B, FERNANDINA BEACH

| | | | |
|---|---|---|---|
| BLD DATE | | LGL DATE | |
| XF DATE | | LAND DATE | 05/08/2025 MLU |
| INC DATE | | AG DATE | |

## NASSAU COUNTY PROPERTY

PAGE 1 of 1 2

### VALUATION SUMMARY

| | | |
|---|---|---|
| VALUATION BY | | STANDARD |
| Tax Group: 2 | Tax Dist: | |
| BUILDING MARKET VALUE | | 459,680 |
| TOTAL MARKET OB/XF VALUE | | 6,663 |
| TOTAL LAND VALUE - MARKET | | 300,000 |
| TOTAL MARKET VALUE | | 766,343 |
| SOH/AGL Deduction | | 211,342 |
| ASSESSED VALUE | | 555,001 |
| TOTAL EXEMPTION VALUE | HX HB | 50,722 |
| BASE TAXABLE VALUE | | 504,279 |
| TOTAL JUST VALUE | | 766,343 |
| NCON VALUE | | 0 |
| INCOME VALUE | | |
| PREVIOUS YEAR MKT VALUE | | 669,606 |

| PERMIT NUM | DESCRIPTION | AMT | ISSUED |
|---|---|---|---|
| 20100273 | REPAIR/RRF | 800 | 02/10/2010 |
| B990999 | NEW CONSTR | 107,284 | 08/09/1999 |

### SALES DATA

| OFF RECORD Number | DATE | TYPE INST | Q / U | V / I | RSN CD | SALE PRICE |
|---|---|---|---|---|---|---|
| 2505/0962 | 10/14/2021 | QC | U | I | 11 | 100 |
| GRANTOR: LAWHORN BONNIE F & DA | | | | | | |
| GRANTEE: LAWHORN BONNIE F & | | | | | | |
| 0824/1333 | 3/02/1998 | WD | Q | V | | 29,000 |
| GRANTOR: WALKER WILLIAM DAVID | | | | | | |
| GRANTEE: FREDERICK BONNIE F | | | | | | |

### BUILDING NOTES

### BUILDING DIMENSIONS

HXP=[YR=2000] W18 FOP=[YR=2000] W18S8 BAS=[YR=2000] S35 UOP=[YR=2000] W4S7E4N2 FOP=[YR=2000] E3N5W3S5$ N5$ E3S5E2 FGR=[YR=2000] S27E13 HXG=[YR=2000] E13 N27 HXB=[YR=2000] E2 HXP=[YR=2000] E3 SXP=[YR=2000] S2E4N7W4S5$ N5W3S5$ N5E3N35W18 S35 FST=[YR=2000] W7S5E7 HXU=[YR=2000] E7 N5W7S5$ N5$ E7S5E6$ W13 S27$ N27W13$ E6N5E7N35W18$ E18N8$ S8E18N8$ PTR=E15 PTO=[YR=2001] E18 HXO=[YR=2001] E18S8 HXB=[YR=2000] S35 HXP=[YR=2000] S5 SXP=[YR=2000] S17W5N17E5$ W5N5E5$ W5S32W13 FUS=[YR=2000] W13 N10 UOP=[YR=2000] W5N17 FOP=[YR=2000] N5E5 S5W5$ E5S17$ N22W5N35E18S67$ N67E18$ W18N8$ S8W18N8$ W15$.

## EXTRA FEATURES

| LN | OB/XF CODE | DESCRIPTION | BLD | CAP | L | W | UNITS | UT | Adj R | ADJ UNIT PRICE | ORIG COND | YEAR ON | YEAR ACTUAL | Q | % COND | OB/XF MKT VALUE | NOTES |
|---|---|---|---|---|---|---|---|---|---|---|---|---|---|---|---|---|---|
| 1 | 0812 | CONCRETE C | 0 | 100 | 0 | 0 | 1,663.00 | SF | 4.00 | 4.00 | 100 | 2000 | 2000 | 3 | 77 | 5,122 | |
| 2 | 0810 | CONCRETE A | 0 | 100 | 0 | 0 | 260.00 | SF | 6.50 | 6.50 | 100 | 2000 | 2000 | 3 | 77 | 1,301 | |
| 3 | 0810 | CONCRETE A | 0 | 100 | 0 | 0 | 48.00 | SF | 6.50 | 6.50 | 100 | 2000 | 2000 | 3 | 77 | 240 | |

## LAND DESCRIPTION

TOTAL OB/XF 6,663

| LN | USE CODE | CLS | LAND USE DESCRIPTION | CAP | RD | LOC ZONE | FRONT | DEPTH | TOT LND UTS | UNIT TYPE | DT | DPTH FACT | % COND | TOT ADJ | UNIT PRICE | ADJ UNIT PRICE | LAND VALUE | OTHER ADJUSTMENTS AND NOTES | YEAR | DENSITY | DECL | FRZ | YR | CONSRV |
|---|---|---|---|---|---|---|---|---|---|---|---|---|---|---|---|---|---|---|---|---|---|---|---|---|
| 1 | 000800 | C | MULTI-FAMILY | 100 | | R-3 | 50.00 | 120.00 | 50.00 | FF | | 1.00 | 1.00 | 1.00 | 6,000.00 | 6,000.00 | 300,000 | | | | | | | |

REVIEW DATE 06/07/2024 BY KBA Total Acres: 0.00 Total Land Value: 300,000 Market: 0 Agricultural: 0 Common: 300,000 PRINTED 07/30/2025 BY SYS