BLOCK 1 LOT 10
IN OR 734/482
SOUTH BEACH SUB PB 3/11

FAB TEC INC
500 EAGLE LAKE LN
DOUGLAS, GA 31533

2025

00-00-31-1720-0001-0100

NASSAU COUNTY PROPERTY

BUILDING CHARACTERISTICS

ELEMENT	CD	CONSTRUCTION
Exterior Wall	05	AVERAGE 100
Roof Structur	03	GABLE/HIP 100
Roof Cover	03	COMP SHNGL 100
Interior Wall	05	DRYWALL 100
Interior Floo	11	CLAY TILE 50
Interior Floo	14	CARPET 50
Air Condition	03	CENTRAL 100
Heating Type	04	AIR DUCTED 100
Bedrooms		3 100
Bathrooms		3 100
Frame	02	WOOD FRAME 100
Stories	2.	2. 100
Units		0 100
BUD8 Adjustme	02	DIST FB 100
Quality	02	Quality Level 02
DOR CODE	0100	SINGLE FAMILY
MAP NUM		MKT AREA 01
NEIGHBORHOOD/LOC	1052.00	

AREA TYPE	TOTAL GROSS AREA	PCT OF BASE	YEAR	TOT ADJ AREA	SUBAREA MARKET VALUE
BAL	160	15	1995	24	2,840
BAS	1,105	100	1995	1,105	130,779
FGR	288	55	1995	158	18,700
FOP	32	30	1995	10	1,183
FOP	75	30	1995	22	2,603
FUS	984	100	1995	984	116,459
UOP	144	20	1995	29	3,433
TOTALS	2,788			2,332	275,998

MARKET ADJUSTMENTS

TYPE	MDL	EFF. AREA	TOT ADJ PTS	EFF. BASE RATE	REPL. COST NEW	AYB	EYB	ECON	FNCT		NORM	% COND
0320	11	2,332	138.0183	138.02	321,863	1995	1995	0	0	0	14.25	85.75

1 TOWNHOUSE - 0% - 0 Heated Area: 2089 HX Base Yr

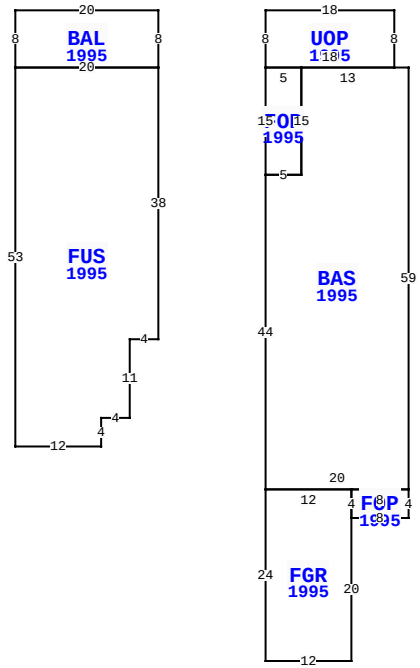

2996 S FLETCHER AVE A&B, FERNANDINA BEACH

BLD DATE		LGL DATE	
XF DATE		LAND DATE	05/07/2025 MLU
INC DATE		AG DATE	

VALUATION SUMMARY

VALUATION BY	STANDARD
Tax Group: 2	Tax Dist:
BUILDING MARKET VALUE	498,510
TOTAL MARKET OB/XF VALUE	13,852
TOTAL LAND VALUE - MARKET	1,187,500
TOTAL MARKET VALUE	1,699,862
SOH/AGL Deduction	29,255
ASSESSED VALUE	1,670,607
TOTAL EXEMPTION VALUE	0
BASE TAXABLE VALUE	1,670,607
TOTAL JUST VALUE	1,699,862
NCON VALUE	0
INCOME VALUE	
PREVIOUS YEAR MKT VALUE	1,521,781

PERMIT NUM	DESCRIPTION	AMT	ISSUED
20101128	REPAIR/RRF	3,750	07/12/2010
20090869	REPAIR/RRF	5,200	07/06/2009
B958870	NEW CONSTR	200,000	02/15/1995
B958806	DEMOLITION	3,500	01/26/1995

SALES DATA

OFF RECORD Number	DATE	TYPE INST	Q U	V I	RSN CD	SALE PRICE
0734/0482	7/19/1995	WD	Q	I	02	464,200
GRANTOR: RANDY PARR CONSTRUCTI						
GRANTEE: FAB TEC INC						
0722/0941	1/24/1995	WD	Q	I		130,000
GRANTOR: PEPLOW ARTHUR & ANTOI						
GRANTEE: RANDY PARR CONSTRUC						

BUILDING NOTES

BUILDING DIMENSIONS

BAL=[YR=1995] W20 S8 FUS=[YR=1995] S53 E12 N4 E4 N11 E4 N38 W20 $ E20 N8 $ PTR= E15 UOP=[YR=1995] E18 S8 BAS=[YR=1995] E2 S59 FOP=[YR=1995] S4 W8 FGR=[YR=1995] S20 W12 N24 E12 S4 $ N4 E8 $ W20 N44 FOP=[YR=1995] E5 N15 W5 S15 $ E5 N15 E13 $ W18 N8 $ W15 $.

EXTRA FEATURES

LN	OB/XF CODE	DESCRIPTION	BLD	CAP	L	W	UNITS	UT	Adj R	ADJ UNIT PRICE	ORIG COND	YEAR ON	YEAR ACTUAL	Q	% COND	OB/XF MKT VALUE	NOTES
1	0811	CONCRETE B	0	0	0	0	768.00	SF	5.20	5.20	100	1995	1995	3	68	2,716	
2	0810	CONCRETE A	0	0	24	5	120.00	SF	6.50	6.50	100	1995	1995	3	68	530	
3	0845	KOOL DECK	0	0	0	0	225.00	SF	7.25	7.25	100	1995	1995	3	68	1,109	
4	0861	POOL GUNIT	0	0	0	0	80.00	SF	85.00	85.00	100	1995	1995	3	20	1,360	
5	0845	KOOL DECK	0	0	0	0	170.00	SF	7.25	7.25	100	1995	1995	3	68	838	
6	0415	BEACHWALK	0	0	0	0	133.00	SF	5.75	5.75	100	1995	1995	3	20	153	
7	1242	WD DECK A	0	0	0	0	3.00	SF	10.00	10.00	100	1995	1995	3	20	6	
8	0812	CONCRETE C	0	0	0	0	1,007.00	SF	4.00	4.00	100	1995	1995	3	68	2,739	
9	0810	CONCRETE A	0	0	24	5	120.00	SF	6.50	6.50	100	1995	1995	3	68	530	
10	0845	KOOL DECK	0	0	0	0	307.00	SF	7.25	7.25	100	1995	1995	3	68	1,514	

TOTAL OB/XF 11,495

LAND DESCRIPTION

LN	USE CODE	CLS	LAND USE DESCRIPTION	CAP	RD	LOC ZONE	FRONT	DEPTH	TOT LND UTS	UNIT TYPE	DT	DPTH FACT	% COND	TOT ADJ	UNIT PRICE	ADJ UNIT PRICE	LAND VALUE	OTHER ADJUSTMENTS AND NOTES	YEAR	DENSITY	DECL	FRZ	YR	CONSRV
1	000120	C	RES OCEAN	0		R-3	50.00	300.00	50.00	FF		1.00	1.00	1.25	19,000.00	23,750.00	1,187,500							

REVIEW DATE 03/26/2020 BY DJA Total Acres: 0.00 Total Land Value: 1,187,500 Market: 0 Agricultural: 0 Common: 1,187,500 PRINTED 07/30/2025 BY SYS

BLOCK 1 LOT 10
IN OR 734/482
SOUTH BEACH SUB PB 3/11

FAB TEC INC
500 EAGLE LAKE LN
DOUGLAS, GA 31533

2025

00-00-31-1720-0001-0100

NASSAU COUNTY PROPERTY

BUILDING CHARACTERISTICS

ELEMENT	CD	CONSTRUCTION
Exterior Wall	05	AVERAGE 100
Roof Structur	03	GABLE/HIP 100
Roof Cover	03	COMP SHNGL 100
Interior Wall	05	DRYWALL 100
Interior Floo	14	CARPET 80
Interior Floo	08	SHT VINYL 20
Air Condition	03	CENTRAL 100
Heating Type	04	AIR DUCTED 100
Bedrooms		3 100
Bathrooms		3 100
Frame	02	WOOD FRAME 100
Stories	2.	2. 100
Units		0 100
Occupancy	00	NONE 100
Quality	04	Quality Level 04

DOR CODE 0100 SINGLE FAMILY
MAP NUM | MKT AREA 01
NEIGHBORHOOD/LOC 1052.00

AREA TYPE	TOTAL GROSS AREA	PCT OF BASE	YEAR	TOT ADJ AREA	SUBAREA MARKET VALUE
BAL	160	15	1995	24	2,287
BAS	1,105	100	1995	1,105	105,300
FGR	288	55	1995	158	15,057
FOP	32	30	1995	10	953
FOP	75	30	1995	22	2,097
FUS	984	100	1995	984	93,769
UOP	160	20	1995	32	3,049
TOTALS	2,804			2,335	222,512

MARKET ADJUSTMENTS

TYPE	MDL	EFF. AREA	TOT ADJ PTS	EFF. BASE RATE	REPL. COST NEW	AYB	EYB	ECON	FNCT		NORM	% COND
0320	01	2,335	111.1320	111.13	259,489	1995	1995	0	0	0	14.25	85.75

2 TOWNHOUSE – 0% - 0 Heated Area: 2089 HX Base Yr

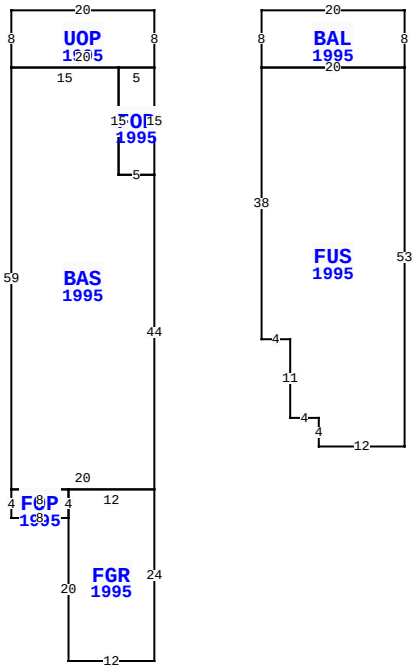

2996 S FLETCHER AVE A&B, FERNANDINA BEACH

BLD DATE		LGL DATE	
XF DATE		LAND DATE	05/07/2025 MLU
INC DATE		AG DATE	

VALUATION SUMMARY

VALUATION BY	STANDARD
Tax Group: 2	Tax Dist:
BUILDING MARKET VALUE	498,510
TOTAL MARKET OB/XF VALUE	13,852
TOTAL LAND VALUE - MARKET	1,187,500
TOTAL MARKET VALUE	1,699,862
SOH/AGL Deduction	29,255
ASSESSED VALUE	1,670,607
TOTAL EXEMPTION VALUE	0
BASE TAXABLE VALUE	1,670,607
TOTAL JUST VALUE	1,699,862
NCON VALUE	0
INCOME VALUE	
PREVIOUS YEAR MKT VALUE	1,521,781

PERMIT NUM	DESCRIPTION	AMT	ISSUED

SALES DATA

OFF RECORD Number	DATE	TYPE INST	Q U	V I	RSN CD	SALE PRICE
0734/0482	7/19/1995	WD	Q	I	02	464,200
GRANTOR: RANDY PARR CONSTRUCTI						
GRANTEE: FAB TEC INC						
0722/0941	1/24/1995	WD	Q	I		130,000
GRANTOR: PEPLOW ARTHUR & ANTOI						
GRANTEE: RANDY PARR CONSTRUC						

BUILDING NOTES

BUILDING DIMENSIONS

UOP=[YR=1995] W20 S8 BAS=[YR=1995] S59 FOP=[YR=1995] S4 E8
FGR=[YR=1995] S20 E12 N24 W12 S4 $ N4 W8 $ E20 N44
FOP=[YR=1995] N15 W5 S15 E5 $ W5 N15 W15 $ E20 N8 $ PTR= E15
BAL=[YR=1995] E20 S8 FUS=[YR=1995] S53 W12 N4 W4 N11 W4 N38
E20 $ W20 N8 $ W15 $.

EXTRA FEATURES

LN	OB/XF CODE	DESCRIPTION	BLD	CAP	L	W	UNITS	UT	Adj R	ADJ UNIT PRICE	ORIG COND	YEAR ON	YEAR ACTUAL	Q	% COND	OB/XF MKT VALUE	NOTES
11	0861	POOL GUNIT	0	0	0	0	80.00	SF	85.00	85.00	100	1995	1995	3	20	1,360	
12	0845	KOOL DECK	0	0	0	0	170.00	SF	7.25	7.25	100	1995	1995	3	68	838	
13	0415	BEACHWALK	0	0	0	0	133.00	SF	5.75	5.75	100	1995	1995	3	20	153	
14	1242	WD DECK A	0	0	0	0	3.00	SF	10.00	10.00	100	1995	1995	3	20	6	

LAND DESCRIPTION

TOTAL OB/XF 2,357

LN	USE CODE	CLS	LAND USE DESCRIPTION	CAP	RD	LOC ZONE	FRONT	DEPTH	TOT LND UTS	UNIT TYPE	DT	DPTH FACT	% COND	TOT ADJ	UNIT PRICE	ADJ UNIT PRICE	LAND VALUE	OTHER ADJUSTMENTS AND NOTES	YEAR	DENSITY	DECL	FRZ	YR	CONSRV

REVIEW DATE 03/26/2020 BY DJA Total Acres: 0.00 Total Land Value: 1,187,500 Market: 0 Agricultural: 0 Common: 1,187,500 PRINTED 07/30/2025 BY SYS