PT LOT 10 BLK 259 OF
CITY OF FDNA BEACH S/D OF
SEC 22-3N-28E UNR & PT LOT 43

PAUKNER TIMOTHY J & LAURA
19 N 15TH ST
FERNANDINA BEACH, FL 32034

2025

00-00-31-1690-0043-0010

BUILDING CHARACTERISTICS

ELEMENT	CD	CONSTRUCTION
Exterior Wall	17	CB STUCCO 100
Roof Structur	03	GABLE/HIP 100
Roof Cover	03	COMP SHNGL 100
Interior Wall	03	PLASTER 100
Interior Floo	12	HARDWOOD 100
Air Condition	03	CENTRAL 100
Heating Type	04	AIR DUCTED 100
Bedrooms		3 100
Bathrooms		2 100
Frame	02	WOOD FRAME 100
Stories	1.	1. 100
Units		0 100
BUD8 Adjustme	02	DIST FB 100
Occupancy	00	NONE 100
Quality	03	Quality Level 03

DOR CODE 0100 SINGLE FAMILY
MAP NUM | MKT AREA 01
NEIGHBORHOOD/LOC 1007.00

AREA TYPE	TOTAL GROSS AREA	PCT OF BASE	YEAR	TOT ADJ AREA	SUBAREA MARKET VALUE
BAS	1,679	100	1993	1,679	151,916
PTO	196	5	2008	10	905
UCP	248	20	1993	50	4,524
UOP	70	20	1993	14	1,267
UOP	88	20	1993	18	1,629
UST	48	45	1993	22	1,991
TOTALS	2,329			1,793	162,231

MARKET ADJUSTMENTS

TYPE	MDL	EFF. AREA	TOT ADJ PTS	EFF. BASE RATE	REPL. COST NEW	AYB	EYB	ECON	FNCT		NORM	% COND
0100	01	1,793	116.0000	116.00	207,988	1951	1980	0	0	0	22.00	78.00

1 SINGLE FAM – 100% - 2017 Heated Area: 1679 HX Base Yr 2017

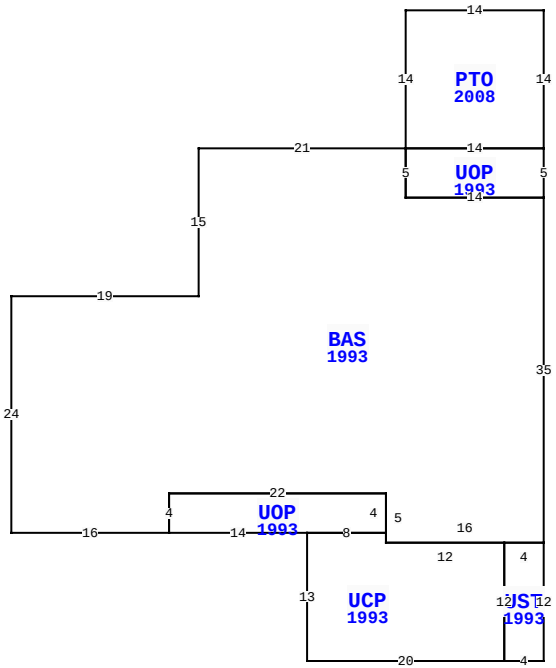

19 N 15TH ST, FERNANDINA BEACH

BLD DATE		LGL DATE	
XF DATE		LAND DATE	05/08/2025 MLU
INC DATE		AG DATE	

NASSAU COUNTY PROPERTY

PAGE 1 of 1 2

VALUATION SUMMARY

VALUATION BY		STANDARD
Tax Group: 2	Tax Dist:	
BUILDING MARKET VALUE		162,231
TOTAL MARKET OB/XF VALUE		3,076
TOTAL LAND VALUE - MARKET		225,000
TOTAL MARKET VALUE		390,307
SOH/AGL Deduction		258,483
ASSESSED VALUE		131,824
TOTAL EXEMPTION VALUE	HX HB	50,722
BASE TAXABLE VALUE		81,102
TOTAL JUST VALUE		390,307
NCON VALUE		0
INCOME VALUE		
PREVIOUS YEAR MKT VALUE		383,335

PERMIT NUM	DESCRIPTION	AMT	ISSUED
20190212	NEW CONSTR	0	04/22/2019
20061827	REPAIR/RRF	5,832	08/01/2006
20033362	CHNGE SRVC	2,000	06/26/2003

SALES DATA

OFF RECORD Number	DATE	TYPE INST	Q U /	V I /	RSN CD	SALE PRICE
2553/0565	4/04/2022	QC	U	I	11	100
GRANTOR: PAUKNER LAURA						
GRANTEE: PAUKNER TIMOTHY J &						
2083/0321	11/04/2016	WD	U	I	30	135,000
GRANTOR: CRISP STACEY F & LAUR						
GRANTEE: PAUKNER LAURA						

BUILDING NOTES

EXTRA FEATURES

LN	OB/XF CODE	DESCRIPTION	BLD	CAP	L	W	UNITS	UT	Adj R	ADJ UNIT PRICE	ORIG COND	YEAR ON	YEAR ACTUAL	Q	% COND	OB/XF MKT VALUE	NOTES
1	0810	CONCRETE A	0	100	0	0	120.00	SF	6.50	6.50	100	1980	1980	3	30	234	
2	0812	CONCRETE C	0	100	0	0	1,308.00	SF	4.00	4.00	100	1988	1988	3	52	2,721	
3	0851	PATIO STON	0	100	14	13	182.00	SF	0.75	0.75	100	2009	2009	3	89	121	

BUILDING DIMENSIONS

BAS=[YR=1993] W21 S15 W19 S24 E16 UOP=[YR=1993] E14
UCP=[YR=1993] S13 E20 UST=[YR=1993] E4 N12W4 S12$ N12 W12 N1
W8$ E8 N4 W22 S4$ N4 E22 S5 E16 N35 UOP=[YR=1993] N5
PTO=[YR=2008] N14 W14 S14 E14$ W14 S5 E14$ W14 N5$.

LAND DESCRIPTION

TOTAL OB/XF 3,076

LN	USE CODE	CLS	LAND USE DESCRIPTION	CAP	RD	LOC ZONE	FRONT	DEPTH	TOT LND UTS	UNIT TYPE	DT	DPTH FACT	% COND	TOT ADJ	UNIT PRICE	ADJ UNIT PRICE	LAND VALUE	OTHER ADJUSTMENTS AND NOTES	YEAR	DENSITY	DECL	FRZ	YR	CONSRV
1	000100	C	RES	100	0006	R-1	70.00	130.00	1.00	LT		1.00	1.00	1.00	225,000.00	225,000.00	225,000							

REVIEW DATE 05/12/2019 BY KBA Total Acres: 0.00 Total Land Value: 225,000 Market: 0 Agricultural: 0 Common: 225,000 PRINTED 07/30/2025 BY SYS