LOT 66
IN OR 1517/1676
SELVA VERDA #3 PB 4/102

MCPHAIL ARLENE
3602 VIA DEL MAR
FERNANDINA BEACH, FL 32034

2025

00-00-31-1687-0066-0000

NASSAU COUNTY PROPERTY

BUILDING CHARACTERISTICS

ELEMENT	CD	CONSTRUCTION
Exterior Wall	11	BD/BTN AVG 80
Exterior Wall	20	FACE BRICK 20
Roof Structur	03	GABLE/HIP 100
Roof Cover	03	COMP SHNGL 100
Interior Wall	05	DRYWALL 100
Interior Floo	11	CLAY TILE 70
Interior Floo	12	HARDWOOD 30
Air Condition	03	CENTRAL 100
Heating Type	04	AIR DUCTED 100
Bedrooms		5 100
Bathrooms		4.5 100
Frame	02	WOOD FRAME 100
Stories	2.	2. 100
Units		0 100
BUD8 Adjustme	02	DIST FB 100
Occupancy	00	NONE 100
Quality	04	Quality Level 04
DOR CODE	0100	SINGLE FAMILY
MAP NUM		MKT AREA 01
NEIGHBORHOOD/LOC	1073.00	

AREA TYPE	TOTAL GROSS AREA	PCT OF BASE	YEAR	TOT ADJ AREA	SUBAREA MARKET VALUE
BAL	120	15	2013	18	2,217
BAS	2,152	100	1993	2,152	265,106
FGR	511	55	1993	281	34,617
FOP	186	30	1993	56	6,899
FST	40	55	1993	22	2,710
FUS	1,056	100	1993	1,056	130,089
UOP	132	20	1993	26	3,203
TOTALS	4,197			3,611	444,841

MARKET ADJUSTMENTS

TYPE	MDL	EFF. AREA	TOT ADJ PTS	EFF. BASE RATE	REPL. COST NEW	AYB	EYB	ECON	FNCT		NORM	% COND
0900	01	3,611	112.4550	148.44	536,017	1988	1993	0	0	0	17.01	82.99

1 SNGL FAM – 100% - 2000 Heated Area: 3208 HX Base Yr 2000

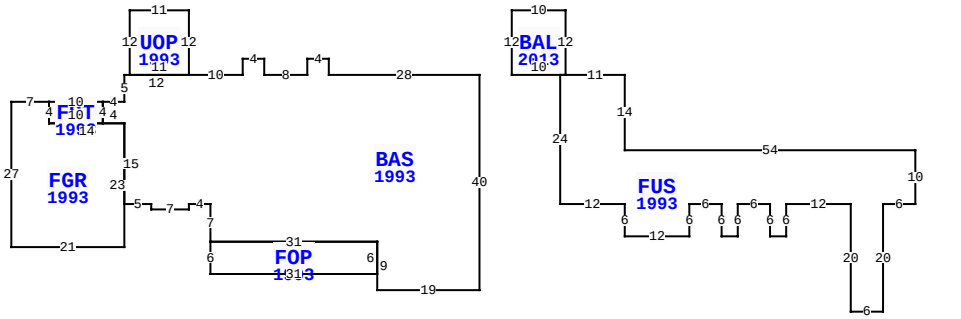

3602 VIA DEL MAR, FERNANDINA BEACH

BLD DATE		LGL DATE	
XF DATE		LAND DATE	05/08/2025 MLU
INC DATE		AG DATE	

VALUATION SUMMARY

VALUATION BY		STANDARD
Tax Group: 2	Tax Dist:	
BUILDING MARKET VALUE		444,841
TOTAL MARKET OB/XF VALUE		19,306
TOTAL LAND VALUE - MARKET		350,000
TOTAL MARKET VALUE		814,147
SOH/AGL Deduction		456,577
ASSESSED VALUE		357,570
TOTAL EXEMPTION VALUE	HX HB SX WX	105,722
BASE TAXABLE VALUE		251,848
TOTAL JUST VALUE		814,147
NCON VALUE		0
INCOME VALUE		
PREVIOUS YEAR MKT VALUE		743,923

PERMIT NUM	DESCRIPTION	AMT	ISSUED
B991164	REPAIR/RRF	2,000	09/02/1999
B990811	XFOB	2,500	07/12/1999
4754	NEW CONSTR	164,000	03/18/1988

SALES DATA

OFF RECORD Number	DATE	TYPE INST	Q / U	V / I	RSN CD	SALE PRICE
1517/1676	8/07/2007	LE	Q	I	01	100
GRANTOR: MCPHAIL RAYMOND & ARL						
GRANTEE: BETZ STEVEN						
1515/0729	7/27/2007	QC	Q	I	06	100
GRANTOR: BETZ STEVE						
GRANTEE: MCPHAIL RAYMOND & A						

BUILDING NOTES

BUILDING DIMENSIONS

BAS=[YR=1993] W28 N3 W4 S3 W8 N3 W4 S3 W10 UOP=[YR=1993] N12 W11 S12 E11 $ W12 S5 W4 FST=[YR=1993] W10 FGR=[YR=1993] W7 S27 E21 N23 W14 N4$ S4 E10 N4$ S4 E4 S15 E5 S1 E7 N1 E4 S7 FOP=[YR=1993] S6 E31 N6 W31 $ E31 S9 E19 N40$ PTR=E15 FUS=[YR=1993] E1 BAL=[YR=2013] N12 W10 S12 E10$ E11 S14 E54 S10 W6S20 W6 N20 W12 S6 W3 N6 W6 S6 W3 N6 W6 S6 W12 N6 W12 N24 $ W15 $.

EXTRA FEATURES

LN	OB/XF CODE	DESCRIPTION	BLD	CAP	L	W	UNITS	UT	Adj R	ADJ UNIT PRICE	ORIG COND	YEAR ON	YEAR ACTUAL	Q	% COND	OB/XF MKT VALUE	NOTES
1	0525	GAZEBO	0	100	0	0	1.00	UT	5,000.00	5,000.00	100	1988	1988	3	20	1,000	
2	0812	CONCRETE C	0	100	0	0	1,424.00	SF	4.00	4.00	100	1988	1988	3	52	2,962	
3	0811	CONCRETE B	0	100	0	0	691.00	SF	5.20	5.20	100	1989	1989	3	54.5	1,958	
4	0810	CONCRETE A	0	100	0	0	824.00	SF	6.50	6.50	100	1989	1989	3	54.5	2,919	
5	0825	BRICK	0	100	0	0	38.00	SF	12.50	12.50	100	1989	1989	3	84	399	
6	0504	FP-ELECTRI	0	100	0	0	1.00	UT	2,000.00	2,000.00	100	1988	1988	3	62	1,240	
7	0855	CONC PAVER	0	100	0	0	113.00	SF	10.00	10.00	100	1989	1989	3	54.5	616	
8	0462	ST/AL FNC	0	100	114	4	456.00	SF	10.00	10.00	100	1989	1989	3	20	912	
9	0463	FENCE GATE	0	100	0	0	1.00	UT	300.00	300.00	100	1989	1989	3	25	75	
10	1126	CB/STC 8"	0	100	0	0	1,657.00	SF	8.00	8.00	100	1989	1989	3	54.5	7,225	

TOTAL OB/XF 19,306

LAND DESCRIPTION

LN	USE CODE	CLS	LAND USE DESCRIPTION	CAP	RD	LOC ZONE	FRONT	DEPTH	TOT LND UTS	UNIT TYPE	DT	DPTH FACT	% COND	TOT ADJ	UNIT PRICE	ADJ UNIT PRICE	LAND VALUE	OTHER ADJUSTMENTS AND NOTES	YEAR	DENSITY	DECL	FRZ	YR	CONSRV
1	000140	C	RES GOLF	100		R1-G	0.00	0.00	1.00	LT		1.00	1.00	1.00	350,000.00	350,000.00	350,000							

REVIEW DATE 08/20/2019 BY DJA Total Acres: 0.00 Total Land Value: 350,000 Market: 0 Agricultural: 0 Common: 350,000 PRINTED 07/30/2025 BY SYS