LOT 59
SELVA VERDA SUB #3 PB 4/102

MARKS CHARLES F & JOANNA F
3616 VIA DEL MAR RD
FERNANDINA BEACH, FL 32034

2025

00-00-31-1687-0059-0000

BUILDING CHARACTERISTICS

ELEMENT	CD	CONSTRUCTION
Exterior Wall	05	AVERAGE 100
Roof Structur	03	GABLE/HIP 100
Roof Cover	03	COMP SHNGL 100
Interior Wall	05	DRYWALL 100
Interior Floo	14	CARPET 70
Interior Floo	12	HARDWOOD 30
Air Condition	03	CENTRAL 100
Heating Type	04	AIR DUCTED 100
Bedrooms		3 100
Bathrooms		2.5 100
Frame	02	WOOD FRAME 100
Stories	2.	2. 100
Units		0 100
Occupancy	00	NONE 100
Quality	03	Quality Level 03

DOR CODE 0100 SINGLE FAMILY
MAP NUM | MKT AREA 01
NEIGHBORHOOD/LOC 1073.00

AREA TYPE	TOTAL GROSS AREA	PCT OF BASE	YEAR	TOT ADJ AREA	SUBAREA MARKET VALUE
BAS	1,623	100	1993	1,623	214,873
BAS	160	100	2022	160	21,183
BAS	162	100	2022	162	21,447
FGR	437	55	1993	240	31,774
FGR	421	55	2022	232	30,715
FOP	296	30	1993	89	11,783
FSP	280	40	2022	112	14,828
FUS	874	100	1993	874	115,711
PTO	24	5	2022	1	132
PTO	112	5	2022	6	794
TOTALS	4,410			3,501	463,507

MARKET ADJUSTMENTS

TYPE	MDL	EFF. AREA	TOT ADJ PTS	EFF. BASE RATE	REPL. COST NEW	AYB	EYB	ECON	FNCT		NORM	% COND
0500	01	3,501	94.9500	150.02	525,220	1993	2000	0	0	0	11.75	88.25

1 SFR CUST – 100% - 2022 Heated Area: 2819 HX Base Yr 2022

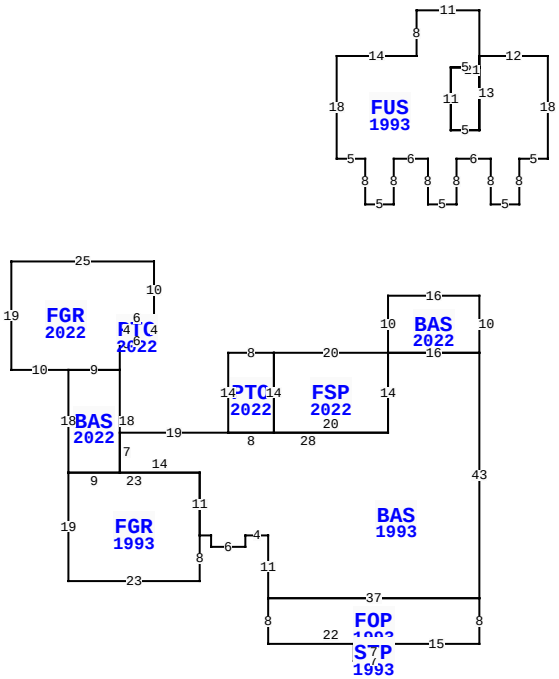

** This building has 11 Sub-Areas

3616 VIA DEL MAR, FERNANDINA BEACH

BLD DATE		LGL DATE	
XF DATE		LAND DATE	05/08/2025 MLU
INC DATE		AG DATE	

NASSAU COUNTY PROPERTY

PAGE 1 of 1 2

VALUATION SUMMARY

VALUATION BY		STANDARD
Tax Group: 2	Tax Dist:	
BUILDING MARKET VALUE		463,507
TOTAL MARKET OB/XF VALUE		8,788
TOTAL LAND VALUE - MARKET		350,000
TOTAL MARKET VALUE		822,295
SOH/AGL Deduction		110,892
ASSESSED VALUE		711,403
TOTAL EXEMPTION VALUE	HX HB	50,722
BASE TAXABLE VALUE		660,681
TOTAL JUST VALUE		822,295
NCON VALUE		0
INCOME VALUE		
PREVIOUS YEAR MKT VALUE		751,572

PERMIT NUM	DESCRIPTION	AMT	ISSUED
20222089	REMODEL	0	04/13/2022
20141702	BATHREM	7,973	08/01/2014
B020375	REPAIR/RRF	3,000	03/05/2002
7759	NEW CONSTR	84,000	06/17/1993

SALES DATA

OFF RECORD Number	DATE	TYPE INST	Q / U	V / I	RSN CD	SALE PRICE
2435/1367	2/19/2021	WD	Q	I	01	597,000
GRANTOR: JOHNSON MARY ALICE						
GRANTEE: MARKS CHARLES F & J						
1962/0329	2/06/2015	QC	U	I	11	100
GRANTOR: JOHNSON WILBUR & MARY						
GRANTEE: JOHNSON MARY ALICE						

BUILDING NOTES

BUILDING DIMENSIONS

FUS=[YR=1993] W5 S11 E5 N21 W11 S8 W14 S18E5S8 E5 N8E6S8 E5N8E6 S8E5N8E5N18W12S 13W5N11E5$ PTR= S50 BAS=[YR=1993] S43 FOP=[YR=1993] S8 W15 STP=[YR=1993] S3 W7 N3 E7 $ W22 N8 E37 $ W37 N11 W4 S2 W6 N2 W2 FGR=[YR=1993] S8 W23 N19 BAS=[YR=2022] N18FGR=[YR=2022] W10N19E25 S10 PTO=[YR=2022] S4W6N4E6$ W6S9W9$ E9 S18 W9$ E23 S11$ N11 W14 N7 E19 PTO=[YR=2022] N14E8 FSP=[YR=2022] E20 BAS=[YR=2022] N10E16S10W16$ S14W20 N14$ S14 W8$ E28 N14 E16$ N50$.

EXTRA FEATURES

LN	OB/XF CODE	DESCRIPTION	BLD	CAP	L	W	UNITS	UT	Adj R	ADJ UNIT PRICE	ORIG COND	YEAR ON	YEAR ACTUAL	Q	% COND	OB/XF MKT VALUE	NOTES
1	0812	CONCRETE C	0	100	0	0	2,068.00	SF	4.00	4.00	100	1993	1993	3	64	5,294	
2	0810	CONCRETE A	0	100	0	0	186.00	SF	6.50	6.50	100	1993	1993	3	64	774	
3	0810	CONCRETE A	0	100	12	4	48.00	SF	6.50	6.50	100	1993	1993	3	64	200	
4	0500	FP-PRE FAB	0	100	0	0	1.00	UT	3,500.00	3,500.00	100	1993	1993	3	72	2,520	

LAND DESCRIPTION

TOTAL OB/XF 8,788

LN	USE CODE	CLS	LAND USE DESCRIPTION	CAP	RD	LOC ZONE	FRONT	DEPTH	TOT LND UTS	UNIT TYPE	DT	DPTH FACT	% COND	TOT ADJ	UNIT PRICE	ADJ UNIT PRICE	LAND VALUE	OTHER ADJUSTMENTS AND NOTES	YEAR	DENSITY	DECL	FRZ	YR	CONSRV
1	000140	C	RES GOLF	100		R1-G	0.00	0.00	1.00	LT		1.00	1.00	1.00	350,000.00	350,000.00	350,000							

REVIEW DATE 11/22/2022 BY DJ Total Acres: 0.00 Total Land Value: 350,000 Market: 0 Agricultural: 0 Common: 350,000 PRINTED 07/30/2025 BY SYS