LOT 35
IN OR 1651/1506
DRAINAGE ESMT IN OR 845/1138

JACKSON KATHLEEN C
2418 LOS ROBLES DR
FERNANDINA BEACH, FL 32034

2025

00-00-31-1686-0035-0000

NASSAU COUNTY PROPERTY

BUILDING CHARACTERISTICS

ELEMENT	CD	CONSTRUCTION
Exterior Wall	16	WD FR STUC 100
Roof Structur	03	GABLE/HIP 100
Roof Cover	12	MODULAR MT 100
Interior Wall	05	DRYWALL 100
Interior Floo	09	PINE WOOD 70
Interior Floo	14	CARPET 30
Air Condition	03	CENTRAL 100
Heating Type	04	AIR DUCTED 100
Bedrooms		3 100
Bathrooms		3 100
Frame	02	WOOD FRAME 100
Stories	1.	1. 100
Units		0 100
Occupancy	00	NONE 100
Quality	04	Quality Level 04

DOR CODE	0100	SINGLE FAMILY	
MAP NUM		MKT AREA	01
NEIGHBORHOOD/LOC	1073.00		

AREA TYPE	TOTAL GROSS AREA	PCT OF BASE	YEAR	TOT ADJ AREA	SUBAREA MARKET VALUE
BAS	3,200	100	1997	3,200	360,809
FGR	576	55	1997	317	35,743
STP	48	10	1997	5	564
USP	864	30	1997	259	29,203
USP	180	30	2009	54	6,089
TOTALS	4,868			3,835	432,407

MARKET ADJUSTMENTS

TYPE	MDL	EFF. AREA	TOT ADJ PTS	EFF. BASE RATE	REPL. COST NEW	AYB	EYB	ECON	FNCT		NORM	% COND
0900	01	3,835	98.7525	130.35	499,892	1997	1997	0	0	0	13.50	86.50

1 SNGL FAM – 100% - 2011 Heated Area: 3200 HX Base Yr 2011

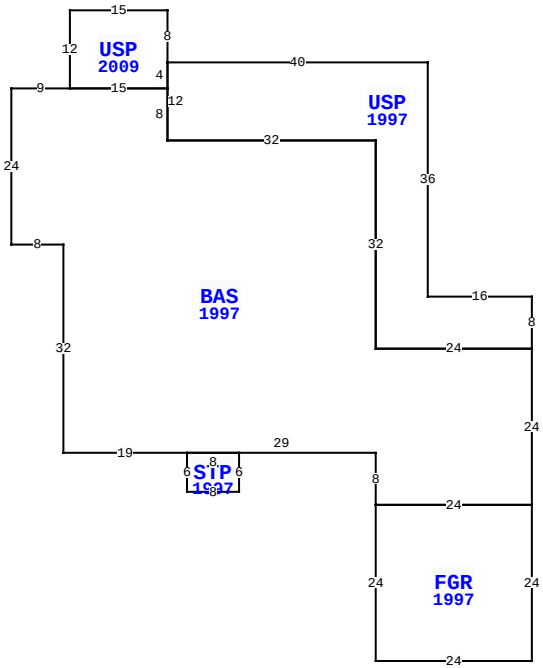

2418 LOS ROBLES, FERNANDINA BEACH

BLD DATE		LGL DATE	
XF DATE		LAND DATE	05/08/2025 MLU
INC DATE		AG DATE	

VALUATION SUMMARY

VALUATION BY		STANDARD
Tax Group: 2	Tax Dist:	
BUILDING MARKET VALUE		432,407
TOTAL MARKET OB/XF VALUE		2,765
TOTAL LAND VALUE - MARKET		350,000
TOTAL MARKET VALUE		785,172
SOH/AGL Deduction		359,233
ASSESSED VALUE		425,939
TOTAL EXEMPTION VALUE	HX HB	50,722
BASE TAXABLE VALUE		375,217
TOTAL JUST VALUE		785,172
NCON VALUE		0
INCOME VALUE		
PREVIOUS YEAR MKT VALUE		714,651

PERMIT NUM	DESCRIPTION	AMT	ISSUED
B9710536	NEW CONSTR	164,736	06/11/1997

SALES DATA

OFF RECORD Number	DATE	TYPE INST	Q U	V I	RSN CD	SALE PRICE
1651/1506	11/27/2009	WD	Q	I	01	465,000
GRANTOR: RONVEAUX RICHARD C &						
GRANTEE: GRAMLING FRANK R &						
0734/1473	7/25/1995	WD	Q	V		49,500
GRANTOR: THE REALTY SOURCE INC						
GRANTEE: RONVEAUX RICHARD C						

BUILDING NOTES

BUILDING DIMENSIONS

USP=[YR=1997] W16 N36 W40 USP=[YR=2009] N8 W15 S12
BAS=[YR=1997] W9S24 E8 S32 E19 STP=[YR=1997] S6 E8 N6 W8$ E29 S8 FGR=[YR=1997] S24 E24 N24 W24$ E24 N24 W24 N32 W32 N8 W15$ E15N4$ S12 E32 S32E24 N8$.

EXTRA FEATURES

LN	OB/XF CODE	DESCRIPTION	BLD	CAP	L	W	UNITS	UT	Adj R	ADJ UNIT PRICE	ORIG COND	YEAR ON	YEAR ACTUAL	Q	% COND	OB/XF MKT VALUE	NOTES
1	0500	FP-PRE FAB	0	100	0	0	1.00	UT	3,500.00	3,500.00	100	1997	1997	3	79	2,765	

LAND DESCRIPTION

TOTAL OB/XF 2,765

LN	USE CODE	CLS	LAND USE DESCRIPTION	CAP	RD	LOC ZONE	FRONT	DEPTH	TOT LND UTS	UNIT TYPE	DT	DPTH FACT	% COND	TOT ADJ	UNIT PRICE	ADJ UNIT PRICE	LAND VALUE	OTHER ADJUSTMENTS AND NOTES	YEAR	DENSITY	DECL	FRZ	YR	CONSRV
1	000140	C	RES GOLF	100		R1-G	0.00	0.00	1.00	LT		1.00	1.00	1.00	350,000.00	350,000.00	350,000							

REVIEW DATE 08/20/2019 BY DJA Total Acres: 0.00 Total Land Value: 350,000 Market: 0 Agricultural: 0 Common: 350,000 PRINTED 07/30/2025 BY SYS