LOT 23
IN OR 405 PG 61
SELVA VERDA SUB PB 4/49

BRIM DANIEL S & SUSAN T
PO BOX 746
FERNANDINA BEACH, FL 32035-0746

2025

00-00-31-1685-0023-0000

NASSAU COUNTY PROPERTY

BUILDING CHARACTERISTICS

ELEMENT	CD	CONSTRUCTION
Exterior Wall	12	CEDAR 100
Roof Structur	03	GABLE/HIP 100
Roof Cover	12	MODULAR MT 100
Interior Wall	05	DRYWALL 100
Interior Floo	12	HARDWOOD 50
Interior Floo	14	CARPET 50
Air Condition	03	CENTRAL 100
Heating Type	04	AIR DUCTED 100
Bedrooms		3 100
Bathrooms		2.5 100
Frame	02	WOOD FRAME 100
Stories	1.	1. 100
Units		0 100
BUD8 Adjustme	02	DIST FB 100
Occupancy	00	NONE 100
Quality	03	Quality Level 03
DOR CODE	0100	SINGLE FAMILY
MAP NUM		MKT AREA 01
NEIGHBORHOOD/LOC	1073.00	

AREA TYPE	TOTAL GROSS AREA	PCT OF BASE	YEAR	TOT ADJ AREA	SUBAREA MARKET VALUE
BAS	1,980	100	1993	1,980	231,259
BAS	324	100	2018	324	37,842
DCK	169	10	2018	17	1,986
FGR	506	55	1993	278	32,470
FOP	75	30	1993	22	2,570
FOP	12	30	2018	4	467
TOTALS	3,066			2,625	306,593

MARKET ADJUSTMENTS

TYPE	MDL	EFF. AREA	TOT ADJ PTS	EFF. BASE RATE	REPL. COST NEW	AYB	EYB	ECON	FNCT		NORM	% COND
0900	01	2,625	109.9200	145.09	380,861	1985	1985	0	0	0	19.50	80.50

1 SNGL FAM – 100% - 0 Heated Area: 2304 HX Base Yr

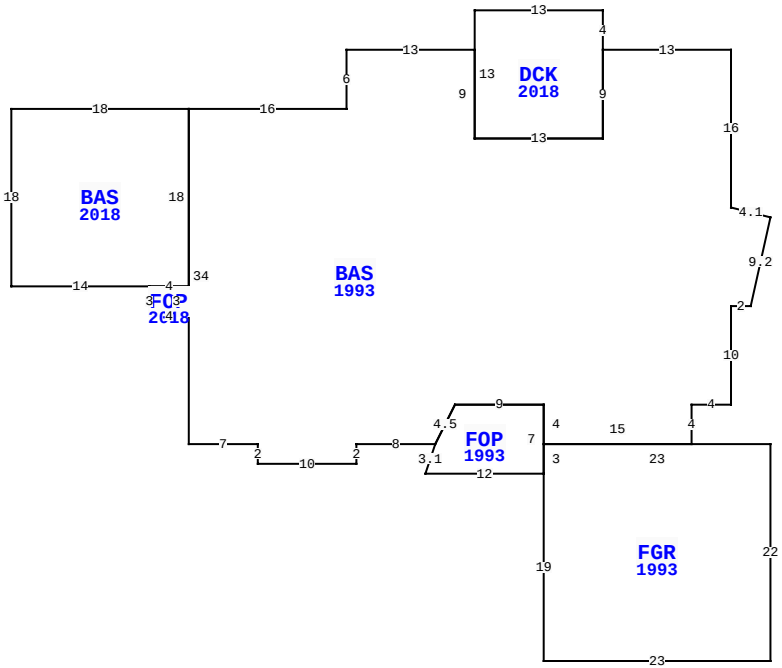

2508 VIA DEL REY, FERNANDINA BEACH

BLD DATE		LGL DATE	
XF DATE		LAND DATE	05/08/2025 MLU
INC DATE		AG DATE	

VALUATION SUMMARY

VALUATION BY		STANDARD
Tax Group: 2	Tax Dist:	
BUILDING MARKET VALUE		306,593
TOTAL MARKET OB/XF VALUE		7,710
TOTAL LAND VALUE - MARKET		350,000
TOTAL MARKET VALUE		664,303
SOH/AGL Deduction		466,358
ASSESSED VALUE		197,945
TOTAL EXEMPTION VALUE	HX HB	50,722
BASE TAXABLE VALUE		147,223
TOTAL JUST VALUE		664,303
NCON VALUE		0
INCOME VALUE		
PREVIOUS YEAR MKT VALUE		600,309

PERMIT NUM	DESCRIPTION	AMT	ISSUED
20171598	ADDITION	82,666	05/24/2017
20100873	REPAIR/RRF	9,000	05/26/2010
4683	XFOB	3,500	02/09/1988

SALES DATA

OFF RECORD Number	DATE	TYPE INST	Q U /	V I /	RSN CD	SALE PRICE
0405/0061	11/01/1983	FS	U	V		100
GRANTOR:						
GRANTEE:						
0295/0039	7/01/1979	DC	Q	V		16,000
GRANTOR:						
GRANTEE:						

BUILDING NOTES

BUILDING DIMENSIONS

BAS=[YR=1993] W13 DCK=[YR=2018] N4 W13 S13 E13 N9$ S9 W13 N9 W13 S6 W16 BAS=[YR=2018] W18 S18 E14 FOP=[YR=2018] S3 E4 N3 W4$ E4 N18$ S34 E7 S2 E10 N2 E8 FOP=[YR=1993] D3 L1 E12 FGR=[YR=1993] S19 E23 N22 W23 S3$ N7 W9 D4 L2 $ U4 R2 E9 S4 E15N4 E4 N10 E2 U9 R2 U1 L4 N16$.

EXTRA FEATURES

LN	OB/XF CODE	DESCRIPTION	BLD	CAP	L	W	UNITS	UT	Adj R	ADJ UNIT PRICE	ORIG COND	YEAR ON	YEAR ACTUAL	Q	% COND	OB/XF MKT VALUE	NOTES
1	0500	FP-PRE FAB	0	100	0	0	1.00	UT	3,500.00	3,500.00	100	1985	1985	3	56	1,960	
2	1242	WD DECK A	0	100	0	0	420.00	SF	10.00	10.00	100	1988	1988	3	20	840	
3	0811	CONCRETE B	0	100	0	0	680.00	SF	5.20	5.20	100	1990	1990	3	57	2,016	
4	1242	WD DECK A	0	100	0	0	680.00	SF	7.50	7.50	100	2009	2009	3	35	1,785	
5	0462	ST/AL FNC	0	100	0	0	132.00	SF	10.00	10.00	100	2018	2018	3	84	1,109	

LAND DESCRIPTION

TOTAL OB/XF 7,710

LN	USE CODE	CLS	LAND USE DESCRIPTION	CAP	RD	LOC ZONE	FRONT	DEPTH	TOT LND UTS	UNIT TYPE	DT	DPTH FACT	% COND	TOT ADJ	UNIT PRICE	ADJ UNIT PRICE	LAND VALUE	OTHER ADJUSTMENTS AND NOTES	YEAR	DENSITY	DECL	FRZ	YR	CONSRV
1	000140	C	RES GOLF	100		R1-G	0.00	0.00	1.00	LT		1.00	1.00	1.00	350,000.00	350,000.00	350,000							

REVIEW DATE 05/12/2019 BY KBA Total Acres: 0.00 Total Land Value: 350,000 Market: 0 Agricultural: 0 Common: 350,000 PRINTED 07/30/2025 BY SYS