LOT 22
SELVA VERDA SUB PB 4/49

MAYNARD FAMILY TRUST/MAYNARD ROBERT E JR TRUSTEE
2504 VIA DEL REY
FERNANDINA BEACH, FL 32034

2025

00-00-31-1685-0022-0000

NASSAU COUNTY PROPERTY

BUILDING CHARACTERISTICS

ELEMENT	CD	CONSTRUCTION
Exterior Wall	10	ABOVE AVG 100
Roof Structur	03	GABLE/HIP 100
Roof Cover	03	COMP SHNGL 100
Interior Wall	05	DRYWALL 100
Interior Floo	12	HARDWOOD 50
Interior Floo	14	CARPET 50
Air Condition	03	CENTRAL 100
Heating Type	04	AIR DUCTED 100
Bedrooms		3 100
Bathrooms		3 100
Frame	02	WOOD FRAME 100
Stories	1.	1. 100
Units		0 100
Occupancy	00	NONE 100
Quality	05	Quality Level 05

DOR CODE 0100 SINGLE FAMILY
MAP NUM | MKT AREA 01
NEIGHBORHOOD/LOC 1073.00

AREA TYPE	TOTAL GROSS AREA	PCT OF BASE	YEAR	TOT ADJ AREA	SUBAREA MARKET VALUE
BAS	3,058	100	2000	3,058	387,249
BAS	184	100	2022	184	23,301
FGR	526	55	2000	289	36,597
FOP	504	30	2000	151	19,122
FSP	370	40	2000	148	18,742
PTO	126	5	2001	6	760
STP	24	10	2001	2	253
TOTALS	4,792			3,838	486,023

MARKET ADJUSTMENTS

TYPE	MDL	EFF. AREA	TOT ADJ PTS	EFF. BASE RATE	REPL. COST NEW	AYB	EYB	ECON	FNCT		NORM	% COND
0900	01	3,838	108.4050	143.09	549,179	2000	2000	0	0	0	11.50	88.50

1 SNGL FAM – 100% - 2014 Heated Area: 3242 HX Base Yr 2014

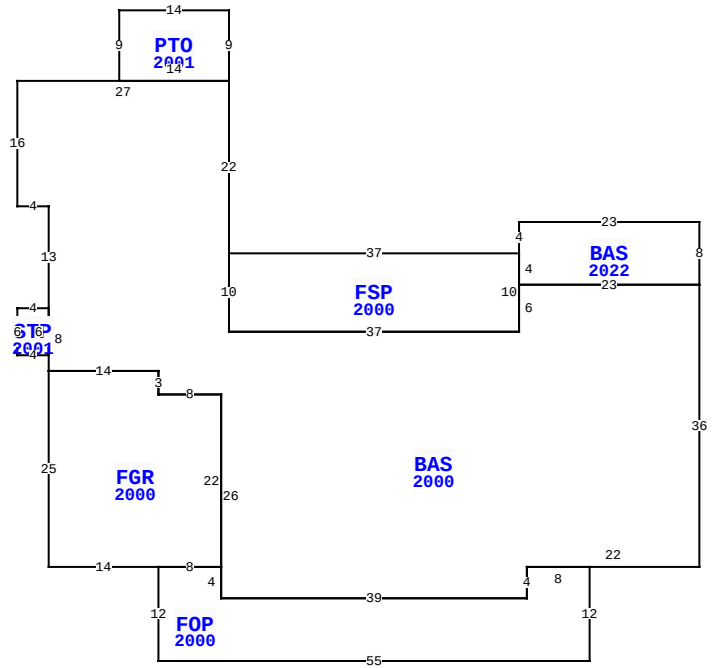

2504 VIA DEL REY, FERNANDINA BEACH

BLD DATE		LGL DATE	
XF DATE		LAND DATE	05/08/2025 MLU
INC DATE		AG DATE	

VALUATION SUMMARY

VALUATION BY		STANDARD
Tax Group: 2	Tax Dist:	
BUILDING MARKET VALUE		486,023
TOTAL MARKET OB/XF VALUE		58,226
TOTAL LAND VALUE - MARKET		350,000
TOTAL MARKET VALUE		894,249
SOH/AGL Deduction		344,348
ASSESSED VALUE		549,901
TOTAL EXEMPTION VALUE	HX HB	50,722
BASE TAXABLE VALUE		499,179
TOTAL JUST VALUE		894,249
NCON VALUE		0
INCOME VALUE		
PREVIOUS YEAR MKT VALUE		823,306

PERMIT NUM	DESCRIPTION	AMT	ISSUED
20211334	ADDITION	0	06/01/2022
20153016	SWIM POOL	20,000	12/31/2015
B991860	NEW CONSTR	220,000	12/29/1999

SALES DATA

OFF RECORD Number	DATE	TYPE INST	Q / U	V / I	RSN CD	SALE PRICE
2566/0732	5/26/2022	WD	U	I	11	100
GRANTOR: MAYNARD ROBERT E JR &						
GRANTEE: MAYNARD FAMILY TRUS						
2333/0733	10/28/2019	QC	U	I	11	100
GRANTOR: MAYNARD FAMILY TRUST						
GRANTEE: MAYNARD ROBERT E JR						

BUILDING NOTES

BUILDING DIMENSIONS

BAS=[YR=2022] W23 S4 FSP=[YR=2000] W37 BAS=[YR=2000] N22PTO=[YR=2001] N9 W14 S9 E14$ W27 S16E4 S13 STP=[YR=2001] W4 S6 E4 N6$ S8FGR=[YR=2000] S25 E14 FOP=[YR=2000] S12 E55 N12 W8 S4 W39 N4 W8$ E8 N22 W8 N3 W14$ E14 S3 E8 S26 E39 N4 E22 N36 W23 S6 W37 N10$S10 E37 N10$ S4 E23 N8$.

EXTRA FEATURES

LN	OB/XF CODE	DESCRIPTION	BLD	CAP	L	W	UNITS	UT	Adj R	ADJ UNIT PRICE	ORIG COND	YEAR ON	YEAR ACTUAL	Q	% COND	OB/XF MKT VALUE	NOTES
1	0812	CONCRETE C	0	100	0	0	2,790.00	SF	4.00	4.00	100	2000	2000	3	77	8,593	
2	0810	CONCRETE A	0	100	0	0	66.00	SF	6.50	6.50	100	2000	2000	3	77	330	
3	0858	SCULP CONC	0	100	3	1	3.00	SF	13.00	13.00	100	2000	2000	3	93	36	
4	0861	POOL GUNIT	0	100	0	0	361.00	SF	85.00	85.00	100	2016	2016	3	78	23,934	
5	0871	POOL HTR R	0	100	0	0	1.00	UT	2,000.00	2,000.00	100	2016	2016	3	70	1,400	
6	0911	SCRN RM A	0	100	0	0	1,258.00	SF	17.50	17.50	100	2016	2016	3	70	15,411	
7	0855	CONC PAVER	0	100	0	0	897.00	SF	10.00	10.00	100	2016	2016	3	95	8,522	

LAND DESCRIPTION

TOTAL OB/XF 58,226

LN	USE CODE	CLS	LAND USE DESCRIPTION	CAP	RD	LOC ZONE	FRONT	DEPTH	TOT LND UTS	UNIT TYPE	DT	DPTH FACT	% COND	TOT ADJ	UNIT PRICE	ADJ UNIT PRICE	LAND VALUE	OTHER ADJUSTMENTS AND NOTES	YEAR	DENSITY	DECL	FRZ	YR	CONSRV
1	000140	C	RES GOLF	100		R1-G	0.00	0.00	1.00	LT		1.00	1.00	1.00	350,000.00	350,000.00	350,000							

REVIEW DATE 11/22/2022 BY DJ Total Acres: 0.00 Total Land Value: 350,000 Market: 0 Agricultural: 0 Common: 350,000 PRINTED 07/30/2025 BY SYS