LOT 12
SELVA VERDA SUB PB 4/49

STEFFEN SUSANNE L/E/
2413 VIA DEL REY
FERNANDINA BEACH, FL 32034

2025

00-00-31-1685-0012-0000

BUILDING CHARACTERISTICS

ELEMENT	CD	CONSTRUCTION
Exterior Wall	12	CEDAR 100
Roof Structur	03	GABLE/HIP 100
Roof Cover	03	COMP SHNGL 100
Interior Wall	05	DRYWALL 100
Interior Floo	09	PINE WOOD 50
Interior Floo	14	CARPET 50
Air Condition	03	CENTRAL 100
Heating Type	04	AIR DUCTED 100
Bedrooms		4 100
Bathrooms		3 100
Frame	02	WOOD FRAME 100
Stories	2.	2. 100
Units		0 100
BUD8 Adjustme	02	DIST FB 100
Occupancy	00	NONE 100
Quality	03	Quality Level 03
DOR CODE	0100	SINGLE FAMILY
MAP NUM		MKT AREA 01
NEIGHBORHOOD/LOC	1073.00	

AREA TYPE	TOTAL GROSS AREA	PCT OF BASE	YEAR	TOT ADJ AREA	SUBAREA MARKET VALUE
BAS	1,693	100	1993	1,693	186,862
DCK	182	10	1994	18	1,987
FOP	35	30	1993	10	1,104
FOP	163	30	1993	49	5,408
FSP	280	40	1993	112	12,362
FUS	1,000	100	1993	1,000	110,373
STR	15	10	1994	2	221
STR	20	10	1994	2	221
STR	28	10	1994	3	331
UGR	485	45	1993	218	24,062
TOTALS	4,203			3,168	349,663

MARKET ADJUSTMENTS

TYPE	MDL	EFF. AREA	TOT ADJ PTS	EFF. BASE RATE	REPL. COST NEW	AYB	EYB	ECON	FNCT		NORM	% COND
0900	01	3,168	100.7400	132.98	421,281	1986	1990	0	0	0	17.00	83.00

1 SNGL FAM – 100% - 0 Heated Area: 2693 HX Base Yr

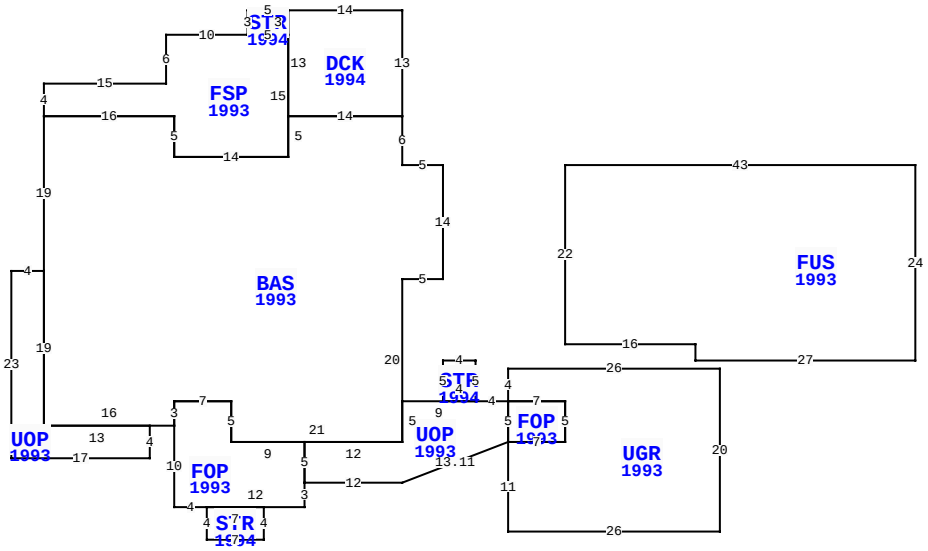

** This building has 12 Sub-Areas

2413 VIA DEL REY, FERNANDINA BEACH

BLD DATE		LGL DATE	
XF DATE		LAND DATE	05/08/2025 MLU
INC DATE		AG DATE	

EXTRA FEATURES

LN	OB/XF CODE	DESCRIPTION	BLD	CAP	L	W	UNITS	UT	Adj R	ADJ UNIT PRICE	ORIG COND	YEAR ON	YEAR ACTUAL	Q	% COND	OB/XF MKT VALUE	NOTES
1	0811	CONCRETE B	0	100	37	17	629.00	SF	5.20	5.20	100	1986	1986	3	47	1,537	

NASSAU COUNTY PROPERTY

PAGE 1 of 1 2

VALUATION SUMMARY

VALUATION BY		STANDARD
Tax Group: 2	Tax Dist:	
BUILDING MARKET VALUE		349,663
TOTAL MARKET OB/XF VALUE		1,537
TOTAL LAND VALUE - MARKET		350,000
TOTAL MARKET VALUE		701,200
SOH/AGL Deduction		424,432
ASSESSED VALUE		276,768
TOTAL EXEMPTION VALUE	HX HB WX	55,722
BASE TAXABLE VALUE		221,046
TOTAL JUST VALUE		701,200
NCON VALUE		0
INCOME VALUE		
PREVIOUS YEAR MKT VALUE		634,713

PERMIT NUM	DESCRIPTION	AMT	ISSUED
20110852	REPAIR/RRF	12,000	06/01/2011

SALES DATA

OFF RECORD Number	DATE	TYPE INST	Q U	V I	RSN CD	SALE PRICE
2297/1391	8/14/2019	LE	U	I	11	100
GRANTOR: STEFFEN SUSANNE						
GRANTEE: STEFFEN SCOTT WILLI						
0484/0074	1/01/1986	WD	U	V		28,500
GRANTOR:						
GRANTEE:						

BUILDING NOTES

BUILDING DIMENSIONS

BAS=[YR=1993] W5 N6 DCK=[YR=1994] N13 W14 STR=[YR=1994] W5S3 FSP=[YR=1993] W10 S6 W15 S4 E16 S5 E14 N15 W5$ E5 N3$ S13 E14$ W14 S5 W14 N5 W16 S19 UOP=[YR=1993] W4 S23 E17N4 W13 N19$ S19 E16 FOP=[YR=1993] S10 E4 STR=[YR=1994] S4 E7 N4 W7$ E12 N3 UOP=[YR=1993] E12 U5 R13 UGR=[YR=1993] S11 E26 N20 W26 S4 FOP=[YR=1993] S5 E7 N5 W7$ E7 S5 W7$ N5 W4 STR=[YR=1994] N5 W4 S5 E4$ W9 S5 W12 S5$ N5 W9 N5 W7 S3$ N3 E7 S5 E21 N20 E5 N14 $ PTR=E15 FUS=[YR=1993] E43 S24 W27 N2 W16N22 $ W15 $.

LAND DESCRIPTION

TOTAL OB/XF 1,537

LN	USE CODE	CLS	LAND USE DESCRIPTION	CAP	RD	LOC ZONE	FRONT	DEPTH	TOT LND UTS	UNIT TYPE	DT	DPTH FACT	% COND	TOT ADJ	UNIT PRICE	ADJ UNIT PRICE	LAND VALUE	OTHER ADJUSTMENTS AND NOTES	YEAR	DENSITY	DECL	FRZ	YR	CONSRV
1	000140	C	RES GOLF	100		R1-G	0.00	0.00	1.00	LT		1.00	1.00	1.00	350,000.00	350,000.00	350,000							

REVIEW DATE 05/12/2019 BY KBA Total Acres: 0.00 Total Land Value: 350,000 Market: 0 Agricultural: 0 Common: 350,000 PRINTED 07/30/2025 BY SYS