BLOCK 14 LOTS 5 6 & 7
IN OR 2201/391
SEAVIEW SUB PB 1/7

ODONNELL JOSEPH M/ODONNELL CAROLINE DI DONATO
3679 S FLETCHER AV
FERNANDINA BEACH, FL 32034

2025

00-00-31-1680-0014-0050

NASSAU COUNTY PROPERTY

BUILDING CHARACTERISTICS

ELEMENT	CD	CONSTRUCTION
Exterior Wall	16	WD FR STUC 70
Exterior Wall	17	CB STUCCO 30
Roof Structur	03	GABLE/HIP 100
Roof Cover	03	COMP SHNGL 100
Interior Wall	05	DRYWALL 100
Interior Floo	14	CARPET 70
Interior Floo	12	HARDWOOD 30
Air Condition	03	CENTRAL 100
Heating Type	04	AIR DUCTED 100
Bedrooms		3 100
Bathrooms		3.5 100
Frame	02	WOOD FRAME 100
Stories	3.	3. 100
Units		0 100
Occupancy	00	NONE 100
Quality	05	Quality Level 05
DOR CODE	0100	SINGLE FAMILY
MAP NUM		MKT AREA 01
NEIGHBORHOOD/LOC	1059.00	

AREA TYPE	TOTAL GROSS AREA	PCT OF BASE	YEAR	TOT ADJ AREA	SUBAREA MARKET VALUE
BAS	293	100	1998	293	46,887
FGR	907	55	1998	499	79,852
FOP	120	30	1998	36	5,761
FOP	235	30	1998	70	11,202
FUS	1,200	100	1998	1,200	192,030
FUS	1,200	100	1998	1,200	192,030
UOP	56	20	1998	11	1,760
UOP	80	20	1998	16	2,560
UOP	120	20	1998	24	3,841
UOP	200	20	1998	40	6,401
TOTALS	4,985			3,504	560,727

MARKET ADJUSTMENTS

TYPE	MDL	EFF. AREA	TOT ADJ PTS	EFF. BASE RATE	REPL. COST NEW	AYB	EYB	ECON	FNCT		NORM	% COND
0500	01	3,504	110.0880	173.94	609,486	1998	2008	0	0	0	8.00	92.00

1 SFR CUST – 100% - 2019 Heated Area: 2693 HX Base Yr 2019

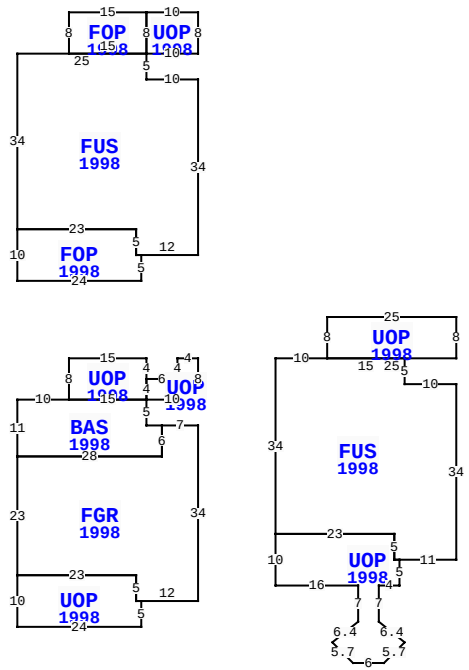

** This building has 12 Sub-Areas

3679 S FLETCHER AVE, FERNANDINA BEACH

BLD DATE	09/13/2011 KK	LGL DATE	
XF DATE		LAND DATE	05/07/2025 MLU
INC DATE		AG DATE	

VALUATION SUMMARY

VALUATION BY		STANDARD
Tax Group: 2	Tax Dist:	
BUILDING MARKET VALUE		560,727
TOTAL MARKET OB/XF VALUE		10,525
TOTAL LAND VALUE - MARKET		568,069
TOTAL MARKET VALUE		1,139,321
SOH/AGL Deduction		373,807
ASSESSED VALUE		765,514
TOTAL EXEMPTION VALUE	HX HB	50,722
BASE TAXABLE VALUE		714,792
TOTAL JUST VALUE		1,139,321
NCON VALUE		0
INCOME VALUE		
PREVIOUS YEAR MKT VALUE		1,015,595

PERMIT NUM	DESCRIPTION	AMT	ISSUED
20121899	WINDOW	4,500	09/12/2012
B983189	NEW CONSTR	135,000	02/17/1998

SALES DATA

OFF RECORD Number	DATE	TYPE INST	Q / U	V / I	RSN CD	SALE PRICE
2201/0391	6/04/2018	WD	Q	I	01	775,000
GRANTOR: ANWAR ASIF & KHALIDA						
GRANTEE: ODONNELL JOSEPH M &						
2128/0933	6/21/2017	WD	Q	I	01	735,000
GRANTOR: BRAEGER PAUL J & SHER						
GRANTEE: ANWAR ASIF & KHALID						

BUILDING NOTES

BUILDING DIMENSIONS

UOP=[YR=1998] W4 S4 W6 UOP=[YR=1998] N4 W15 S8 BAS=[YR=1998] W10 S11 FGR=[YR=1998] S23 UOP=[YR=1998] S10 E24 N5 W1 N5 W23 $ E23 S5 E12 N34 W7 S6 W28 $ E28 N6 W3 N5 W15 $ E15 N4 $ S4 E10 N8 $ PTR= E15 FUS=[YR=1998] E10 UOP=[YR=1998] N8 E25 S8 W25 $ E15 S5 E10 S34 W11 UOP=[YR=1998] S5 W4 S7 R5 D4 D4 L4 W6 L4 U4 U4 R5 N7W16 N10 E23 S5 E1 $ W1 N5 W23 N34 $ W15 $ PTR= N20 FUS=[YR=1998] N34 W10 N5 UOP=[YR=1998] E10 N8 W10 FOP=[YR=1998] W15 S8 E15 N8 $ S8 $ W25 S34 FOP=[YR=1998] S10 E24 N5 W1 N5 W23 $ E23 S5 E12 $ S20 $.

EXTRA FEATURES

LN	OB/XF CODE	DESCRIPTION	BLD	CAP	L	W	UNITS	UT	Adj R	ADJ UNIT PRICE	ORIG COND	YEAR ON	YEAR ACTUAL	Q	% COND	OB/XF MKT VALUE	NOTES
1	0500	FP-PRE FAB	0	100	0	0	1.00	UT	3,500.00	3,500.00	100	1998	1998	3	80	2,800	
2	0810	CONCRETE A	0	100	0	0	1,423.00	SF	6.50	6.50	100	1998	1998	3	73	6,752	
3	0810	CONCRETE A	0	100	0	0	205.00	SF	6.50	6.50	100	1998	1998	3	73	973	

LAND DESCRIPTION

TOTAL OB/XF 10,525

LN	USE CODE	CLS	LAND USE DESCRIPTION	CAP	RD	LOC ZONE	FRONT	DEPTH	TOT LND UTS	UNIT TYPE	DT	DPTH FACT	% COND	TOT ADJ	UNIT PRICE	ADJ UNIT PRICE	LAND VALUE	OTHER ADJUSTMENTS AND NOTES	YEAR	DENSITY	DECL	FRZ	YR	CONSRV
1	000100	C	RES	100		R-1	75.00	125.00	75.00	FF	1	1.09	1.00	1.01	7,500.00	7,574.25	568,069							

REVIEW DATE 01/06/2023 BY TWA Total Acres: 0.00 Total Land Value: 568,069 Market: 0 Agricultural: 0 Common: 568,069 PRINTED 07/30/2025 BY SYS