BLOCK 9 LOTS 1 THRU 4 E 35
FT OF 6 THRU 9
IN OR 2418/817

JACKSON RICHARD S & CELESTE E
2285 SADDLESPRINGS DR
ALPHARETTA, GA 30004

2025

00-00-31-1680-0009-0010

NASSAU COUNTY PROPERTY

BUILDING CHARACTERISTICS

ELEMENT	CD	CONSTRUCTION
Exterior Wall	10	ABOVE AVG 100
Roof Structur	03	GABLE/HIP 100
Roof Cover	03	COMP SHNGL 100
Interior Wall	05	DRYWALL 100
Interior Floo	12	HARDWOOD 50
Interior Floo	14	CARPET 50
Air Condition	03	CENTRAL 100
Heating Type	04	AIR DUCTED 100
Bedrooms		5 100
Bathrooms		6 100
Frame	02	WOOD FRAME 100
Stories	2.	2. 100
Units		0 100
BUD8 Adjustme	02	DIST FB 100
Quality	05	Quality Level 05
DOR CODE	0100	SINGLE FAMILY
MAP NUM		MKT AREA 01
NEIGHBORHOOD/LOC	1053.00	

AREA TYPE	TOTAL GROSS AREA	PCT OF BASE	YEAR	TOT ADJ AREA	SUBAREA MARKET VALUE
BAL	40	15	2024	6	1,892
BAL	70	15	2024	10	3,153
BAS	66	100	1993	66	20,810
BAS	2,604	100	1993	2,604	821,063
BAS	44	100	2024	44	13,874
BAS	150	100	2024	150	47,297
DCX	234	15	2024	35	11,036
FBM	1,797	80	2024	1,438	453,413
FGR	555	55	1993	305	96,169
FOP	160	30	1993	48	15,135
TOTALS	8,197			6,251	1,970,993

MARKET ADJUSTMENTS

TYPE	MDL	EFF. AREA	TOT ADJ PTS	EFF. BASE RATE	REPL. COST NEW	AYB	EYB	ECON	FNCT		NORM	% COND
0500	12	6,251	202.6018	320.11	2,001,008	1993	2020	0	0	0	1.50	98.50

1 SFR CUST – 0% - 0 Heated Area: 5522 HX Base Yr

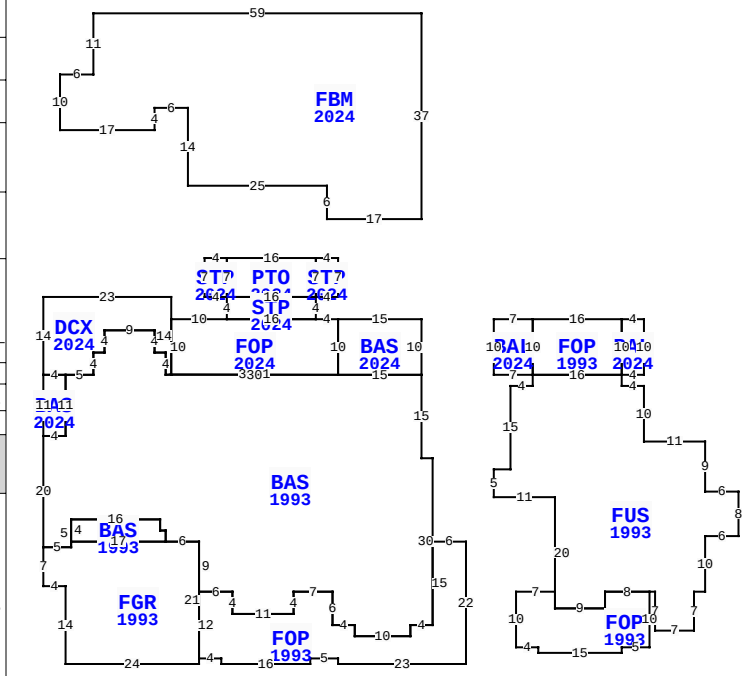

** This building has 18 Sub-Areas

4020 S FLETCHER AVE, FERNANDINA BEACH

BLD DATE		LGL DATE	
XF DATE		LAND DATE	05/07/2025 MLU
INC DATE		AG DATE	

VALUATION SUMMARY

VALUATION BY	STANDARD
Tax Group: 2	Tax Dist:
BUILDING MARKET VALUE	1,970,993
TOTAL MARKET OB/XF VALUE	160,209
TOTAL LAND VALUE - MARKET	2,242,000
TOTAL MARKET VALUE	4,373,202
SOH/AGL Deduction	53,520
ASSESSED VALUE	4,319,682
TOTAL EXEMPTION VALUE	0
BASE TAXABLE VALUE	4,319,682
TOTAL JUST VALUE	4,373,202
NCON VALUE	0
INCOME VALUE	
PREVIOUS YEAR MKT VALUE	3,989,923

PERMIT NUM	DESCRIPTION	AMT	ISSUED
20211283	SFR RMDL COMPLETE		04/20/2023
20222519	SWIM POOL	75,000	12/15/2022
20211283	ADDITION	1,500,000	05/19/2021
20210058	REMODEL	0	04/27/2021
20111209	REPAIR/RRF	8,600	07/25/2011
B984649	XFOB	11,960	12/14/1998

SALES DATA

OFF RECORD Number	DATE	TYPE INST	Q / U	V / I	RSN CD	SALE PRICE
2418/0817	12/16/2020	WD	Q	I	01	2,960,000
GRANTOR: PARFITT DIANNE						
GRANTEE: JACKSON RICHARD S &						
1713/0443	11/19/2010	QC	U	I	11	100
GRANTOR: PARFITT DIANNE						
GRANTEE: PARFITT DIANNE						

BUILDING NOTES

BUILDING DIMENSIONS

BAS=[YR=1993;ORIG=-48,0] W9 S4 W2 S4 W5 S11 W4 S20 E5 N5 E16 S2 E1 S2 E6 S9 E6 S4 E11 N4 E7 S6 E4 S2 E10 N2 E4 N30 W2 N15 W15 U0.1L30.1 D0.1L0.11 N4 W2 N4 $
FUS=[YR=1993;ORIG=36,8] S2 E4 S10 E11 S9 E6 S8 W6 S10 W2 S7 W7 N7 W1 W8 S3 W9 N20 W11 N5 E3 N15 E4 N2 E16 $
FGR=[YR=1993;ORIG=-68,39] S7 E4 S14 E24 N1 N21 W6 W17 S1 W5 $
FOP=[YR=1993;ORIG=-40,59] E4 S1 E16 N1 E5 S1 E23 N22 W6 S15 W4 S2 W10 N2 W4 N6 W7 S4 W11 N4 W6 S12 $
FOP=[YR=2024;ORIG=-15,8] W30 N10 E10 E16 E4 S10 $
DCX=[YR=2024;ORIG=-45,8] W1 N4 W2 N4 W9 S4 W2 S4 W5 W4 N14 E23 S14 $
FOP=[YR=1993;ORIG=41,47] S10 W5 S1 W15 N1 W4 N10 E7 S3 E9 N3

EXTRA FEATURES

LN	OB/XF CODE	DESCRIPTION	BLD	CAP	L	W	UNITS	UT	Adj R	ADJ UNIT PRICE	ORIG COND	YEAR ON	YEAR ACTUAL	Q	% COND	OB/XF MKT VALUE	NOTES
1	1126	CB/STC 8"	0	0	0	0	992.00	SF	8.00	8.00	100	1993	1993	3	64	5,079	
2	1126	CB/STC 8"	0	0	0	0	841.00	SF	8.00	8.00	100	1999	1999	3	75	5,046	
3	0504	FP-ELECTRI	1	0	0	0	2.00	UT	4,000.00	4,000.00	100	2024	2023		100	8,000	
4	0811	CONCRETE B	1	0	0	0	1,737.00	SF	5.20	5.20	100	2024	2023		100	9,032	
5	0857	SANDSTONE/	1	0	0	0	492.00	SF	16.00	16.00	100	2024	2023		100	7,872	
6	0600	SUMMER KIT	1	0	0	0	1.00	UT	5,000.00	5,000.00	100	2024	2023		97	4,850	
7	0861	POOL GUNIT	0	0	0	0	934.00	SF	85.00	85.00	100	2024	2023		98	77,802	
8	0857	SANDSTONE/	0	0	0	0	2,658.00	SF	16.00	16.00	100	2024	2023		100	42,528	

LAND DESCRIPTION

TOTAL OB/XF 160,209

LN	USE CODE	CLS	LAND USE DESCRIPTION	CAP	RD	LOC ZONE	FRONT	DEPTH	TOT LND UTS	UNIT TYPE	DT	DPTH FACT	% COND	TOT ADJ	UNIT PRICE	ADJ UNIT PRICE	LAND VALUE	OTHER ADJUSTMENTS AND NOTES	YEAR	DENSITY	DECL	FRZ	YR	CONSRV
1	000120	C	RES OCEAN	0		R-1	100.00	400.00	100.00	FF	3	1.18	1.00	1.18	19,000.00	22,420.00	2,242,000							

REVIEW DATE 02/15/2024 BY DJ Total Acres: 0.00 Total Land Value: 2,242,000 Market: 0 Agricultural: 0 Common: 2,242,000 PRINTED 07/30/2025 BY SYS