LOT 51 IN OR 1074/1768
SEASIDE PB 6/161

SCOTT DAVID N & LINDA
497 CROSSWIND DR
FERNANDINA BEACH, FL 32034

2025

00-00-31-1679-0051-0000

NASSAU COUNTY PROPERTY

BUILDING CHARACTERISTICS

ELEMENT	CD	CONSTRUCTION
Exterior Wall	16	WD FR STUC 80
Exterior Wall	23	REINF CONC 20
Roof Structur	08	IRREGULAR 100
Roof Cover	03	COMP SHNGL 100
Interior Wall	05	DRYWALL 100
Interior Floo	14	CARPET 90
Interior Floo	15	HARDTILE 10
Air Condition	03	CENTRAL 100
Heating Type	04	AIR DUCTED 100
Bedrooms		4 100
Bathrooms		3 100
Frame	02	WOOD FRAME 100
Stories	1.5	1.5 100
Units		0 100
Occupancy	00	NONE 100
Quality	05	Quality Level 05
DOR CODE	0100	SINGLE FAMILY
MAP NUM		MKT AREA 01
NEIGHBORHOOD/LOC	1080.00	

AREA TYPE	TOTAL GROSS AREA	PCT OF BASE	YEAR	TOT ADJ AREA	SUBAREA MARKET VALUE
BAS	1,988	100	2001	1,988	336,693
FGR	546	55	2001	300	50,809
FOP	80	30	2001	24	4,065
FOP	161	30	2001	48	8,130
FST	15	55	2001	8	1,355
FUS	383	100	2001	383	64,866
PTO	72	5	2001	4	677
TOTALS	3,245			2,755	466,593

MARKET ADJUSTMENTS

TYPE	MDL	EFF. AREA	TOT ADJ PTS	EFF. BASE RATE	REPL. COST NEW	AYB	EYB	ECON	FNCT		NORM	% COND
0500	01	2,755	121.1232	191.37	527,224	2001	2001	0	0	0	11.50	88.50

1 SFR CUST – 100% - 2013 Heated Area: 2371 HX Base Yr 2013

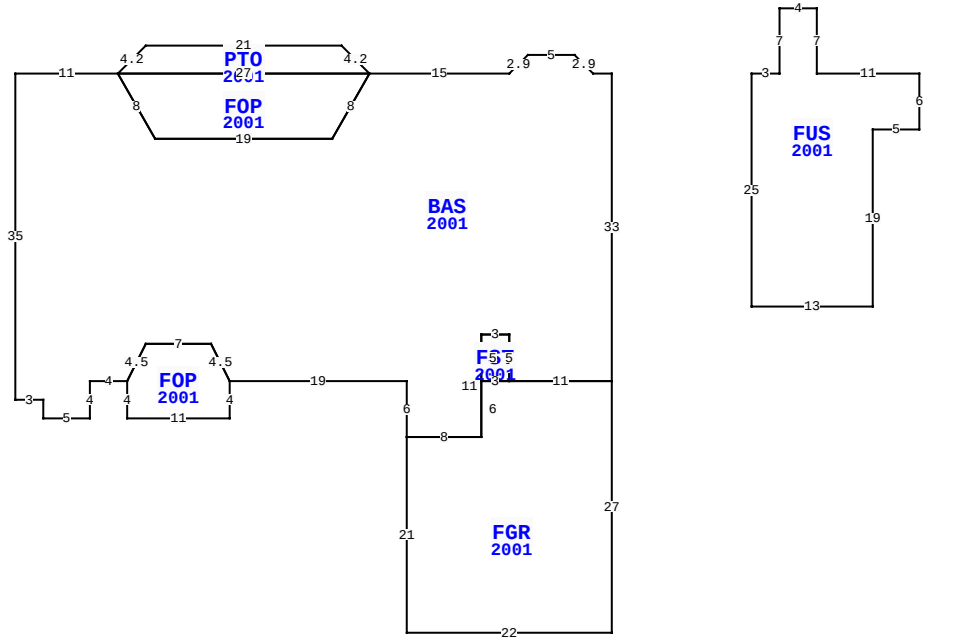

497 CROSSWIND DR, FERNANDINA BEACH

BLD DATE		LGL DATE	
XF DATE		LAND DATE	05/06/2025 MLU
INC DATE		AG DATE	

VALUATION SUMMARY

VALUATION BY		STANDARD
Tax Group: 2	Tax Dist:	
BUILDING MARKET VALUE		466,593
TOTAL MARKET OB/XF VALUE		9,452
TOTAL LAND VALUE - MARKET		300,000
TOTAL MARKET VALUE		776,045
SOH/AGL Deduction		404,101
ASSESSED VALUE		371,944
TOTAL EXEMPTION VALUE	HX HB	50,722
BASE TAXABLE VALUE		321,222
TOTAL JUST VALUE		776,045
NCON VALUE		0
INCOME VALUE		
PREVIOUS YEAR MKT VALUE		680,038

PERMIT NUM	DESCRIPTION	AMT	ISSUED
20010136	NEW CONSTR	285,124	01/30/2001

SALES DATA

OFF RECORD Number	DATE	TYPE INST	Q / U	V / I	RSN CD	SALE PRICE
1074/1768	8/14/2002	WD	Q	I		270,000
GRANTOR: BEAZER HOMES CORP						
GRANTEE: SCOTT DAVID N & LIN						
0963/1247	12/22/2000	WD	U	V	09	100
GRANTOR: SEASIDE JOINT VENTURE						
GRANTEE: PANITZ HOMES						

BUILDING NOTES

EXTRA FEATURES

LN	OB/XF CODE	DESCRIPTION	BLD	CAP	L	W	UNITS	UT	Adj R	ADJ UNIT PRICE	ORIG COND	YEAR ON	YEAR ACTUAL	Q	% COND	OB/XF MKT VALUE	NOTES
1	0500	FP-PRE FAB	0	100	0	0	1.00	UT	3,500.00	3,500.00	100	2001	2001	3	84	2,940	
2	0819	CONC 12"	0	100	4	6	24.00	SF	9.50	9.50	100	2001	2001	3	79	180	
3	0810	CONCRETE A	0	100	75	16	1,200.00	SF	6.50	6.50	100	2001	2001	3	79	6,162	
4	0810	CONCRETE A	0	100	3	3	9.00	SF	6.50	6.50	100	2001	2001	3	79	46	
5	1242	WD DECK A	0	100	7	4	28.00	SF	15.00	15.00	100	2001	2001	3	20	84	
6	1242	WD DECK A	0	100	5	4	20.00	SF	10.00	10.00	100	2001	2001	3	20	40	

BUILDING DIMENSIONS

BAS=[YR=2001] W2 U2 L2 W5 D2 L2 W15 PTO=[YR=2001] U3 L3 W21 L3 D3 E27$ FOP=[YR=2001] W27 D7 R4 E19 R4 U7 $ D7 L4 W19 L4 U7 W11 S35 E3 S2 E5 N4 E4 FOP=[YR=2001] S4 E11 N4 L2 U4 W7 D4 L2 $ R2 U4 E7 D4 R2 E19 S6 FGR=[YR=2001] S21 E22 N27 W11 FST=[YR=2001] N5 W3 S5 E3 $ W3 S6 W8 $ E8 N11 E3 S5 E11 N33 $ PTR= E15 FUS=[YR=2001] E3 N7 E4 S7 E11 S6 W5 S19 W13 N25 $ W15 $.

LAND DESCRIPTION

TOTAL OB/XF 9,452

LN	USE CODE	CLS	LAND USE DESCRIPTION	CAP	RD	LOC ZONE	FRONT	DEPTH	TOT LND UTS	UNIT TYPE	DT	DPTH FACT	% COND	TOT ADJ	UNIT PRICE	ADJ UNIT PRICE	LAND VALUE	OTHER ADJUSTMENTS AND NOTES	YEAR	DENSITY	DECL	FRZ	YR	CONSRV
1	000100	C	RES	100		R-1	0.00	0.00	1.00	LT		1.00	1.00	1.00	300,000.00	300,000.00	300,000							

REVIEW DATE 05/12/2019 BY KBA Total Acres: 0.00 Total Land Value: 300,000 Market: 0 Agricultural: 0 Common: 300,000 PRINTED 07/30/2025 BY SYS