LOT 25
IN OR 1001/1520
THE RESIDENCE @ AMELIA

COOMBE RICHARD R
2321 YARD ARM WAY
FERNANDINA BEACH, FL 32034

2025

00-00-31-1652-0025-0000

NASSAU COUNTY PROPERTY

BUILDING CHARACTERISTICS

ELEMENT	CD	CONSTRUCTION
Exterior Wall	10	ABOVE AVG 100
Roof Structur	03	GABLE/HIP 100
Roof Cover	03	COMP SHNGL 100
Interior Wall	05	DRYWALL 100
Interior Floo	12	HARDWOOD 100
Air Condition	03	CENTRAL 100
Heating Type	04	AIR DUCTED 100
Bedrooms		4 100
Bathrooms		3.5 100
Frame	02	WOOD FRAME 100
Stories	2.	2. 100
Units		0 100
Occupancy	00	NONE 100
Quality	04	Quality Level 04

DOR CODE 0100 SINGLE FAMILY
MAP NUM | MKT AREA 01
NEIGHBORHOOD/LOC 1049.00

AREA TYPE	TOTAL GROSS AREA	PCT OF BASE	YEAR	TOT ADJ AREA	SUBAREA MARKET VALUE
BAS	1,976	100	2008	1,976	367,169
FGR	915	55	2008	503	93,465
FOP	16	30	2008	5	929
FOP	80	30	2008	24	4,459
FOP	100	30	2008	30	5,574
FOP	279	30	2008	84	15,608
FOP	279	30	2008	84	15,608
FOP	309	30	2008	93	17,281
FUS	506	100	2008	506	94,022
FUS	1,242	100	2008	1,242	230,781
TOTALS	6,401			4,791	890,235

MARKET ADJUSTMENTS

TYPE	MDL	EFF. AREA	TOT ADJ PTS	EFF. BASE RATE	REPL. COST NEW	AYB	EYB	ECON	FNCT		NORM	% COND
0500	11	4,791	127.1424	200.88	962,416	2008	2008	0	0	0	7.50	92.50

1 SFR CUST – 100% - 2010 Heated Area: 3724 HX Base Yr 2010

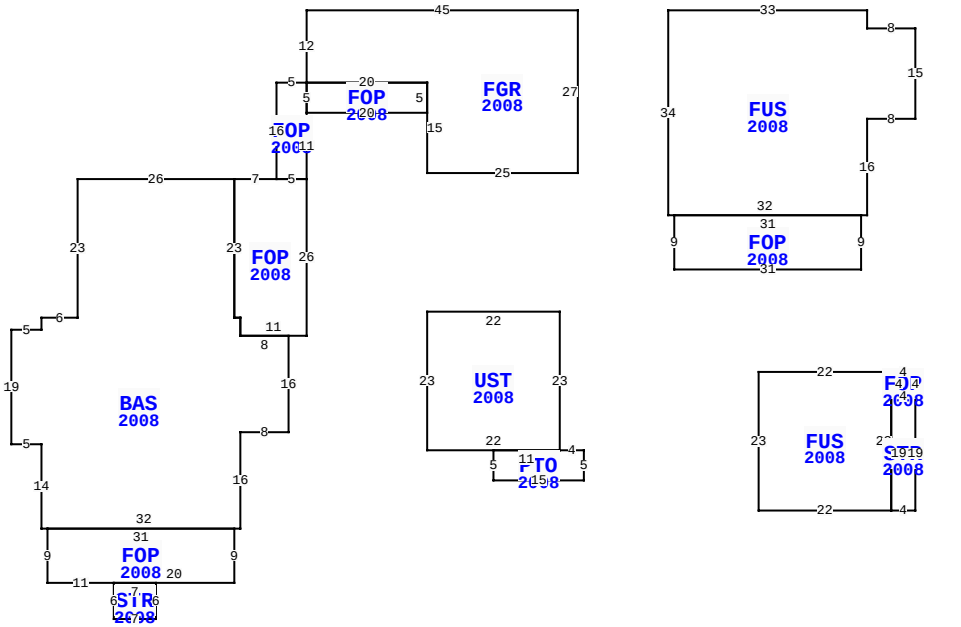

** This building has 14 Sub-Areas

2321 YARD ARM WAY, FERNANDINA BEACH

BLD DATE	12/31/2008	DJ	LGL DATE		
XF DATE	07/26/2007	RK	LAND DATE	05/01/2025	MLU
INC DATE			AG DATE		

NASSAU COUNTY PROPERTY — VALUATION SUMMARY

VALUATION BY		STANDARD
Tax Group: 2	Tax Dist:	
BUILDING MARKET VALUE		890,235
TOTAL MARKET OB/XF VALUE		32,543
TOTAL LAND VALUE - MARKET		180,000
TOTAL MARKET VALUE		1,102,778
SOH/AGL Deduction		570,393
ASSESSED VALUE		532,385
TOTAL EXEMPTION VALUE	HX HB VX WR	60,722
BASE TAXABLE VALUE		471,663
TOTAL JUST VALUE		1,102,778
NCON VALUE		0
INCOME VALUE		
PREVIOUS YEAR MKT VALUE		869,016

PERMIT NUM	DESCRIPTION	AMT	ISSUED
20071846	CO ISSUED	0	04/01/2009
20080266	GAS	1,795	02/21/2008
20080142	H/AC	10,500	01/31/2008
20071846	NEW CONSTR	671,600	09/28/2007

SALES DATA

OFF RECORD Number	DATE	TYPE INST	Q / U	V / I	RSN CD	SALE PRICE
1001/1520	8/08/2001	WD	Q	V		80,000
GRANTOR: SEAWARD HOMES INC						
GRANTEE: COOMBE RICHARD R &						
0923/0637	3/08/2000	WD	U	V	19	200,000
GRANTOR: AMELIA LANDINGS PARTN						
GRANTEE: SEAWARD HOMES						

BUILDING NOTES

BUILDING DIMENSIONS

FGR=[YR=2008] W45 S12 FOP=[YR=2008] W5 S16 FOP=[YR=2008] W7 BAS=[YR=2008] W26 S23 W6 S2 W5 S19 E5 S14 E1 FOP=[YR=2008] S9 E11 STR=[YR=2008] S6 E7 N6 W7$ E20 N9 W31$ E32 N16 E8 N16 W8 N3 W1 N23$ S23 E1 S3 E11 N26 W5$ E5N11 FOP=[YR=2008] E20 N5 W20 S5$ N5$ E20 S15 E25 N27 $ PTR=E15 FUS=[YR=2008] E33 S3 E8 S15 W8 S16 W1 FOP=[YR=2008] S9 W31 N9 E31$ W32 N34$ W15$ PTR=S50 W25 UST=[YR=2008] E22 S23 PTO=[YR=2008] E4 S5 W15 N5 E11$ W22 N23$ E25 N50$ PTR=S60 E30 FUS=[YR=2008] E22 FOP=[YR=2008] E4 S4 STR=[YR=2008] S19 W4 N19 E4$ W4 N4$ S23 W22 N23$ W30 N60$.

EXTRA FEATURES

L N	OB/XF CODE	DESCRIPTION	BLD	CAP	L	W	UNITS	UT	Adj R	ADJ UNIT PRICE	ORIG COND	YEAR ON	YEAR ACTUAL	Q	% COND	OB/XF MKT VALUE	NOTES
1	1242	WD DECK A	0	100	8	4	32.00	SF	10.00	10.00	100	2008	2008	3	31	99	
2	0810	CONCRETE A	0	100	18	6	108.00	SF	6.50	6.50	100	2008	2008	3	88	618	
3	0810	CONCRETE A	0	100	6	6	36.00	SF	6.50	6.50	100	2008	2008	3	88	206	
4	0810	CONCRETE A	0	100	9	4	36.00	SF	6.50	6.50	100	2008	2008	3	88	206	
5	0500	FP-PRE FAB	0	100	0	0	2.00	UT	3,500.00	3,500.00	100	2008	2008	3	91	6,370	
6	0810	CONCRETE A	0	100	22	19	418.00	SF	6.50	6.50	100	2008	2008	3	88	2,391	
7	0855	CONC PAVER	0	100	52	4	208.00	SF	7.00	7.00	100	2008	2008	3	88	1,281	
8	0855	CONC PAVER	0	100	35	4	140.00	SF	7.00	7.00	100	2008	2008	3	88	862	
9	0855	CONC PAVER	0	100	25	4	100.00	SF	7.00	7.00	100	2008	2008	3	88	616	
10	0855	CONC PAVER	0	100	0	0	360.00	SF	7.00	7.00	100	2008	2008	3	88	2,218	

TOTAL OB/XF 14,867

LAND DESCRIPTION

L N	USE CODE	CLS	LAND USE DESCRIPTION	CAP	R D	LOC ZONE	FRONT	DEPTH	TOT LND UTS	UNIT TYPE	D T	DPTH FACT	% COND	TOT ADJ	UNIT PRICE	ADJ UNIT PRICE	LAND VALUE	OTHER ADJUSTMENTS AND NOTES	YEAR	DENSITY	DECL	FRZ	YR	CONSRV
1	000100	C	RES	100		R-2	0.00	0.00	1.00	LT		1.00	1.00	1.00	180,000.00	180,000.00	180,000							

REVIEW DATE 08/27/2019 BY DJA Total Acres: 0.00 Total Land Value: 180,000 Market: 0 Agricultural: 0 Common: 180,000 PRINTED 07/30/2025 BY SYS

LOT 25
IN OR 1001/1520
THE RESIDENCE @ AMELIA

COOMBE RICHARD R
2321 YARD ARM WAY
FERNANDINA BEACH, FL 32034

2025

00-00-31-1652-0025-0000

BUILDING CHARACTERISTICS

ELEMENT	CD	CONSTRUCTION

DOR CODE	0100	SINGLE FAMILY	
MAP NUM		MKT AREA	01
NEIGHBORHOOD/LOC	1049.00		

AREA TYPE	TOTAL GROSS AREA	PCT OF BASE	YEAR	TOT ADJ AREA	SUBAREA MARKET VALUE
TOTALS					

MARKET ADJUSTMENTS

TYPE	MDL	EFF. AREA	TOT ADJ PTS	EFF. BASE RATE	REPL. COST NEW	AYB	EYB	ECON	FNCT		NORM	% COND

BLD DATE	12/31/2008	DJ	LGL DATE
XF DATE	07/26/2007	RK	LAND DATE 05/01/2025 MLU
INC DATE			AG DATE

NASSAU COUNTY PROPERTY

PAGE 2 of 2 2

VALUATION SUMMARY

VALUATION BY		STANDARD
Tax Group: 2	Tax Dist:	
BUILDING MARKET VALUE		890,235
TOTAL MARKET OB/XF VALUE		32,543
TOTAL LAND VALUE - MARKET		180,000
TOTAL MARKET VALUE		1,102,778
SOH/AGL Deduction		570,393
ASSESSED VALUE		532,385
TOTAL EXEMPTION VALUE	HX HB VX WR	60,722
BASE TAXABLE VALUE		471,663
TOTAL JUST VALUE		1,102,778
NCON VALUE		0
INCOME VALUE		
PREVIOUS YEAR MKT VALUE		869,016

PERMIT NUM	DESCRIPTION	AMT	ISSUED

SALES DATA

OFF RECORD Number	DATE	TYPE INST	Q / U	V / I	RSN CD	SALE PRICE
1001/1520	8/08/2001	WD	Q	V		80,000
GRANTOR: SEAWARD HOMES INC						
GRANTEE: COOMBE RICHARD R &						
0923/0637	3/08/2000	WD	U	V	19	200,000
GRANTOR: AMELIA LANDINGS PARTN						
GRANTEE: SEAWARD HOMES						

BUILDING NOTES

BUILDING DIMENSIONS

EXTRA FEATURES

LN	OB/XF CODE	DESCRIPTION	BLD	CAP	L	W	UNITS	UT	Adj R	ADJ UNIT PRICE	ORIG COND	YEAR ON	YEAR ACTUAL	Q	% COND	OB/XF MKT VALUE	NOTES
11	0855	CONC PAVER	0	100	0	0	2,628.00	SF	7.00	7.00	100	2008	2008	3	88	16,188	
12	0940	SHEDS/PORT	0	100	10	16	160.00	SF	30.00	30.00	100	2008	2008	3	31	1,488	

LAND DESCRIPTION

TOTAL OB/XF 17,676

LN	USE CODE	CLS	LAND USE DESCRIPTION	CAP	RD	LOC ZONE	FRONT	DEPTH	TOT LND UTS	UNIT TYPE	DT	DPTH FACT	% COND	TOT ADJ	UNIT PRICE	ADJ UNIT PRICE	LAND VALUE	OTHER ADJUSTMENTS AND NOTES	YEAR	DENSITY	DECL	FRZ	YR	CONSRV

REVIEW DATE 08/27/2019 BY DJA Total Acres: 0.00 Total Land Value: 180,000 Market: 0 Agricultural: 0 Common: 180,000 PRINTED 07/30/2025 BY SYS