BLOCK B LOT 16
IN OR 1585/260
PIRATES COVE 1 REPLAT PB 5/8

SHAW NILA
2613 BLACKBEARD PLACE
FERNANDINA BEACH, FL 32034

2025

00-00-31-1640-000B-0160

BUILDING CHARACTERISTICS

ELEMENT	CD	CONSTRUCTION
Exterior Wall	10	ABOVE AVG 100
Roof Structur	08	IRREGULAR 100
Roof Cover	03	COMP SHNGL 100
Interior Wall	05	DRYWALL 100
Interior Floo	12	HARDWOOD 70
Interior Floo	14	CARPET 30
Air Condition	03	CENTRAL 100
Heating Type	04	AIR DUCTED 100
Bedrooms		5 100
Bathrooms		5 100
Frame	02	WOOD FRAME 100
Stories	1.5	1.5 100
Units		0 100
Occupancy	00	NONE 100
Quality	03	Quality Level 03
DOR CODE	0100	SINGLE FAMILY
MAP NUM		MKT AREA 01
NEIGHBORHOOD/LOC	1083.00	

AREA TYPE	TOTAL GROSS AREA	PCT OF BASE	YEAR	TOT ADJ AREA	SUBAREA MARKET VALUE
BAS	2,525	100	2006	2,525	393,595
DCK	15	10	2006	2	312
FDC	256	35	2006	90	14,029
FGR	498	55	2006	274	42,711
FOP	40	30	2006	12	1,870
FOP	72	30	2006	22	3,429
FOP	391	30	2006	117	18,238
FSP	252	40	2006	101	15,743
FUS	1,395	100	2006	1,395	217,452
FUS	108	100	2009	108	16,835
TOTALS	6,098			5,192	809,326

MARKET ADJUSTMENTS

TYPE	MDL	EFF. AREA	TOT ADJ PTS	EFF. BASE RATE	REPL. COST NEW	AYB	EYB	ECON	FNCT		NORM	% COND
0500	01	5,192	107.8250	170.36	884,509	2006	2006	0	0	0	8.50	91.50

1 SFR CUST – 100% - 2009 Heated Area: 4574 HX Base Yr 2009

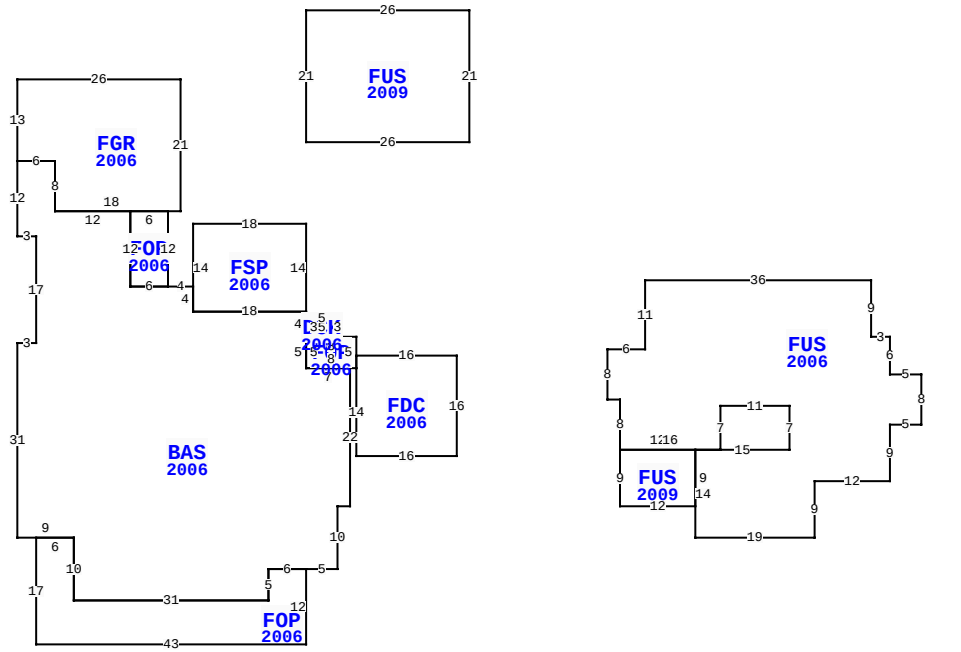

** This building has 11 Sub-Areas

2613 BLACKBEARD PL, FERNANDINA BEACH

BLD DATE		LGL DATE	
XF DATE		LAND DATE	05/06/2025 MLU
INC DATE		AG DATE	

NASSAU COUNTY PROPERTY

PAGE 1 of 1 2

VALUATION SUMMARY

VALUATION BY		STANDARD
Tax Group: 2	Tax Dist:	
BUILDING MARKET VALUE		809,326
TOTAL MARKET OB/XF VALUE		21,101
TOTAL LAND VALUE - MARKET		405,000
TOTAL MARKET VALUE		1,235,427
SOH/AGL Deduction		694,837
ASSESSED VALUE		540,590
TOTAL EXEMPTION VALUE	HX HB WX	55,722
BASE TAXABLE VALUE		484,868
TOTAL JUST VALUE		1,235,427
NCON VALUE		0
INCOME VALUE		
PREVIOUS YEAR MKT VALUE		1,043,953

PERMIT NUM	DESCRIPTION	AMT	ISSUED
20061019	GAS	350	05/12/2006
20060855	OTHER	10,400	04/25/2006
20060728	H/AC	12,000	04/12/2006
20053238	ELEC OTHER	18,000	12/27/2005
20052796	DEMOLITION	2,500	10/06/2005
20052797	NEW CONSTR	433,000	10/06/2005

SALES DATA

OFF RECORD Number	DATE	TYPE INST	Q / U	V / I	RSN CD	SALE PRICE
1585/0260	9/16/2008	WD	Q	I		785,000
GRANTOR: PORTER D GRANT & LAUR						
GRANTEE: SHAW CHARLES & NILA						
1370/0158	11/29/2005	WD	Q	V		90,000
GRANTOR: CLAYTON BUCHANAN BUIL						
GRANTEE: PORTER D GRANT & LA						

BUILDING NOTES

EXTRA FEATURES

LN	OB/XF CODE	DESCRIPTION	BLD	CAP	L	W	UNITS	UT	Adj R	ADJ UNIT PRICE	ORIG COND	YEAR ON	YEAR ACTUAL	Q	% COND	OB/XF MKT VALUE	NOTES
1	0500	FP-PRE FAB	0	100	0	0	1.00	UT	3,500.00	3,500.00	100	2006	2006	3	89	3,115	
2	0810	CONCRETE A	0	100	0	0	230.00	SF	11.38	11.38	100	2006	2006	3	86	2,250	
3	0810	CONCRETE A	0	100	0	0	2,512.00	SF	7.15	7.15	100	2006	2006	3	86	15,446	
4	1242	WD DECK A	0	100	4	7	28.00	SF	10.00	10.00	100	2006	2006	3	24	67	
5	1242	WD DECK A	0	100	0	0	93.00	SF	10.00	10.00	100	2006	2006	3	24	223	

BUILDING DIMENSIONS

FOP=[YR=2006] N12 BAS=[YR=2006] E5 N10 E2 N22 W7
FOP=[YR=2006] E8 FDC=[YR=2006] S14 E16 N16 W16 S2$ N5 W8 S5$
N5 DCK=[YR=2006] E5 N3 W5 S3$ N4 FSP=[YR=2006] N14 W18 S14
E18$ W18 N4 W4 FOP=[YR=2006] N12 FGR=[YR=2006] E2 N21 W26 S13
E6 S8 E18$ W6 S12 E6$ W6 N12 W12 N8 W6 S12 E3 S17 W3 S31 E9
S10 E31 N5 E6$ W6 S5 W31 N10 W6 S17 E43$ PTR= N22 E50
FUS=[YR=2009] N9 FUS=[YR=2006] N8 W2 N8 E6 N11 E36 S9 E3 S6
E5 S8 W5 S9 W12 S9 W19 N14 E15 N7 W11 S7 W16$ E12 S9 W12$ S22
W50$ PTR=N80 FUS=[YR=2009] E26 N21 W26 S21$ S80$.

LAND DESCRIPTION

TOTAL OB/XF 21,101

LN	USE CODE	CLS	LAND USE DESCRIPTION	CAP	RD	LOC ZONE	FRONT	DEPTH	TOT LND UTS	UNIT TYPE	DT	DPTH FACT	% COND	TOT ADJ	UNIT PRICE	ADJ UNIT PRICE	LAND VALUE	OTHER ADJUSTMENTS AND NOTES	YEAR	DENSITY	DECL	FRZ	YR	CONSRV
1	000100	C	RES	100		R-1	0.00	0.00	1.00	LT		1.00	1.00	1.00	405,000.00	405,000.00	405,000							

REVIEW DATE 05/12/2019 BY KBA Total Acres: 0.00 Total Land Value: 405,000 Market: 0 Agricultural: 0 Common: 405,000 PRINTED 07/30/2025 BY SYS